MECHANICAL UNITS

TAV.1 Crankcase
TAV.2 Driving Shaft - Connecting Rods and Pistons
TAV.3 R.H. Cylinder Head
TAV.4 L.H. Cylinder Head
TAV.5 Timing - Tappets and Shields
TAV.6 Timing - Controls
TAV.7 Injection Device - Ignition
TAV.8 Pneumatics Actuator System
TAV.9 Secondary Air System - Valid for USA
TAV.10 Fuel Pumps and Pipes
TAV.11 Fuel Tanks and Union
TAV.12 Fuel Tanks - Fixing and Protection
TAV.13 Antievaporation Device -Not for USA
TAV.14 Antievaporation Device -Valid for USA
TAV.15 Air Intake Manifold
TAV.16 Air Intake
TAV.17 Air Intake Manifold Cover
TAV.18 Electronic Accelerator Pedal
TAV.19 Exhaust System
TAV.20 Racing Exhaust System - Optional -
TAV.21 Lubrication System and Blow-by System
TAV.22 Pumps and Oil Sump
TAV.23 Nourice
TAV.24 Cooling System
TAV.25 Cooling System Radiators
TAV.26 Water Pump and Oil/Water Heat Exchanger
TAV.27 Clutch and Controls - Not for F1 -
TAV.28 Clutch and Controls - Valid for F1 -
TAV.29 Pedals - Not for GD -
TAV.30 Pedals - Valid for GD -
TAV.31 F1 Clutch Hydraulic Control - Valid for F1 -
TAV.32 Power Unit and Tank - Valid for F1 -
TAV.33 Gearbox - Covers
TAV.34 Main Shaft Gears
TAV.35 Lay Shaft Gears
TAV.36 Inside Gearbox Controls
TAV.37 Outside Gearbox Controls
TAV.38 Differential and Axle Shaft
TAV.39 Brakes and Clutch Hydraulic Controls - Not for GD -
TAV.40 Brakes and Clutch Hydraulic Controls - Valid for GD -
TAV.41 Brake Booster System
TAV.42 Brake System - Not for GD -
TAV.43 Brake System - Valid for GD -
TAV.44 Calipers For Front and Rear Brakes
TAV.45 Hand-brake Control
TAV.46 Hydraulic Steering Box and Serpentine
TAV.47 Steering Column
TAV.48 Hydraulic Steering Pump and Tank
TAV.49 Front Suspension - Shock Absorber and Brake Disc
TAV.50 Front Suspension - Wishbones
TAV.51 Rear Suspension - Shock Absorber and Brake Disc
TAV.52 Rear Suspension - Wishbones
TAV.53 Wheels
TAV.54 Battery
TAV.55 Current Generator - Starting Motor
TAV.56 Air Conditioning Compressor
TAV.57 Tools Equipment and Accessories
TAV.58 Spare Wheel and Equipment - Optional -

COACHWORK

TAV.100 Body - Outer Trims
TAV.101 Frame - Complete Front Part Structures and Plates
TAV.102 Frame - Front Elements Structures and Plates
TAV.103 Central Side Elements and Plates
TAV.104 Frame - Rear Elements Structures and Plates
TAV.105 Frame - Rear Elements Sub-Groups
TAV.106 Flat Floor Pan and Wheelhouse
TAV.107 Insulations
TAV.108 Passengers Compartment Carpets
TAV.109 Front Compartment Trims
TAV.110 Roof Panel Upholstery and Accessories
TAV.111 Chassis-Gaskets-Mouldings
TAV.112 Linings andCapote Top Housing
TAV.113 Capote Mechanism and Tie Rods
TAV.114 Capote Front Closing
TAV.115 Capote Movement-Upper Part
TAV.116 Capote Movement-Lower Part
TAV.117 Capote Control and Flaps
TAV.118 Capote Control Station and Microswitches
TAV.119 Hydraulic Plant and Electrohydraulic Pump
TAV.120 Front Hood and Opening Device
TAV.121 Engine Bonnet
TAV.122 Opening Devices for Engine Bonnet and Door
TAV.123 Doors- Framework and Coverings
TAV.124 Doors-Opening Control and Hinges
TAV.125 Doors-Power window and Rearview Mirror
TAV.126 Front Bumper
TAV.127 Rear Bumper
TAV.128 Glasses and Gaskets
TAV.129 Manual Seat-Safety Belts
TAV.130 Electrical Seat-Safety Belts
TAV.131 Electrical Seat-Guide and Movement
TAV.132 Racing Seat
TAV.134 Rear Glove Box
TAV.135 Dashboard
TAV.136 Dashboard Drawer
TAV.137 Air-Bags
TAV.138 Passenger Air-Bag Exclusion Kit
TAV.139 Dashboard Instruments
TAV.140 Front and Rear Lights
TAV.141 Shields-Outside Finishing
TAV.142 Windshield,Glass Washer and Horns
TAV.143 Electrical System
TAV.144 Front Passengers Compartment Control Stations
TAV.145 Front and Motor Compartments Electrical Boards and Sensor
TAV.146 Rear Passengers Compartment Control Stations
TAV.147 Anti-Theft Electrical Boards and Devices
TAV.148 Evaporator Unit
TAV.149 Air Conditioning System
TAV.150 Stereo Equipment
TAV.151 Radio Amplifier System

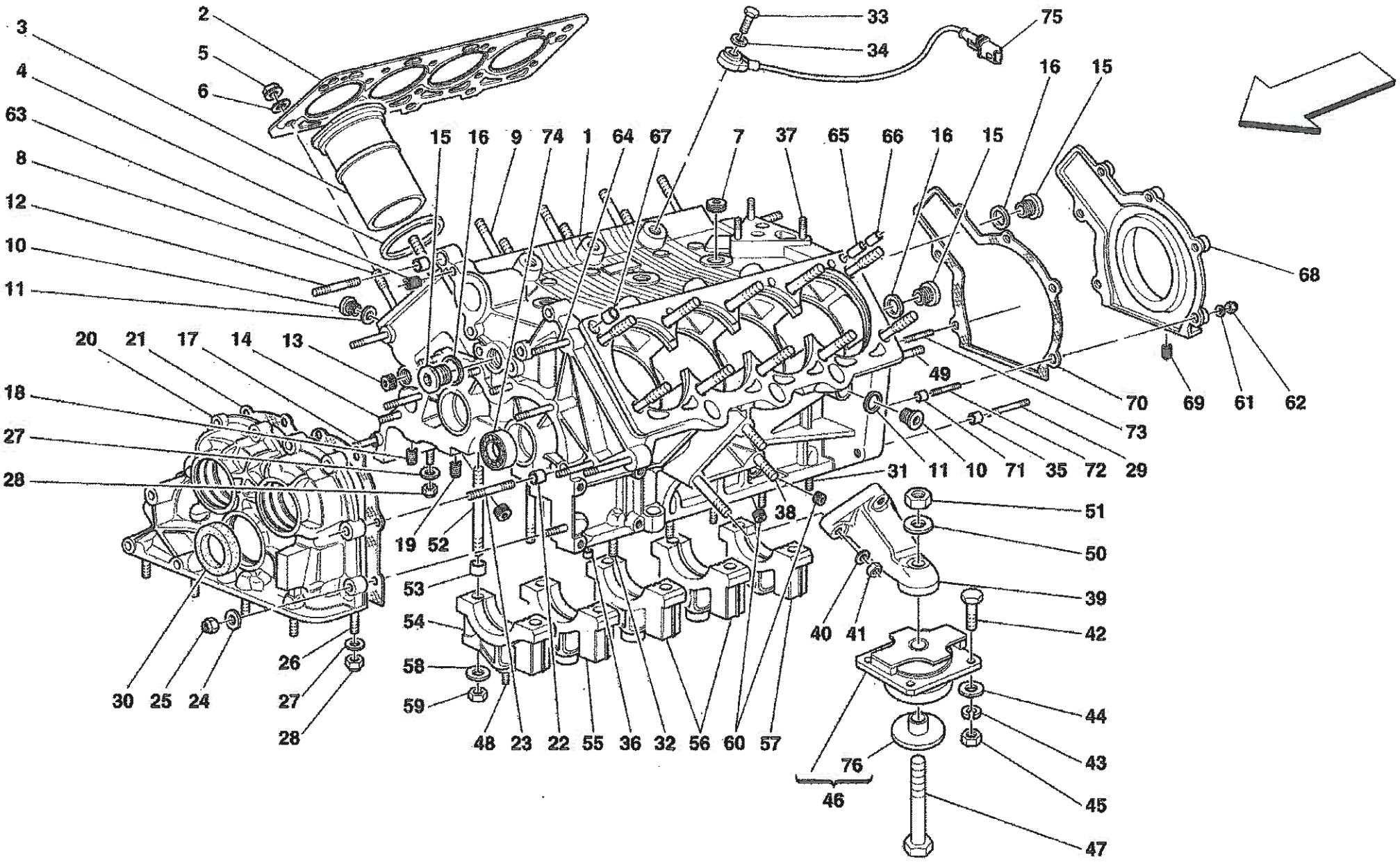
2
3
5
6
4
63
8
12
10
11
20
21
17
14
13
18
27
28
15
16
9
74
1
64
67
7
37
65
66
16
15
33
34
75
16
15
68
49
70
69
61
62
73
31
11
10
71
35
72
29
38
51
50
39
42
40
41
19
52
53
54
58
59
30
25
24
26
27
28
48
23
22
55
36
32
56
60
57
76
46
44
43
45
47

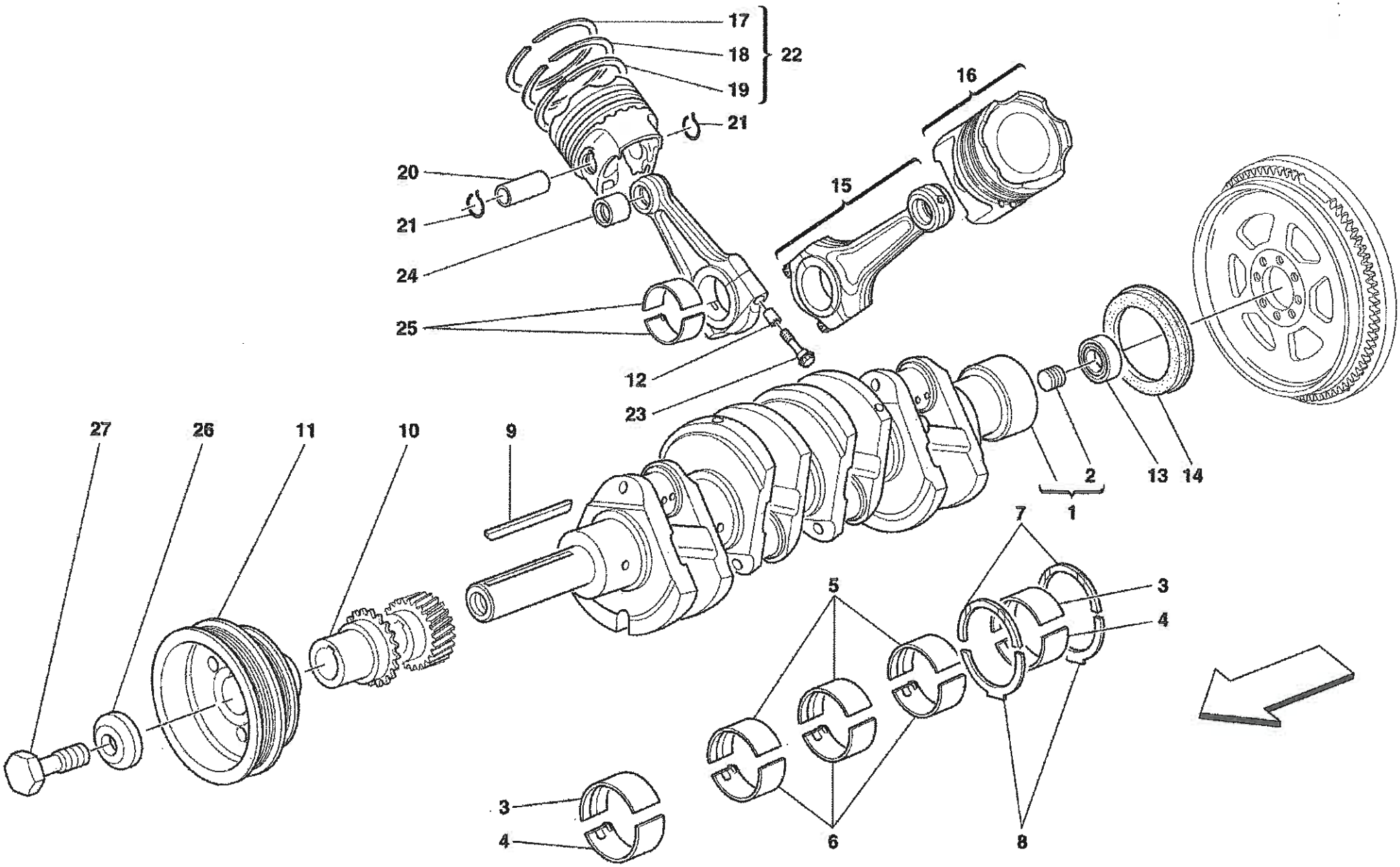
17
18
19
22
21
16
20
21
15
24
25
12
23
27
26
11
10
9
2
1
13
14
7
5
3
4
3
4
6
8

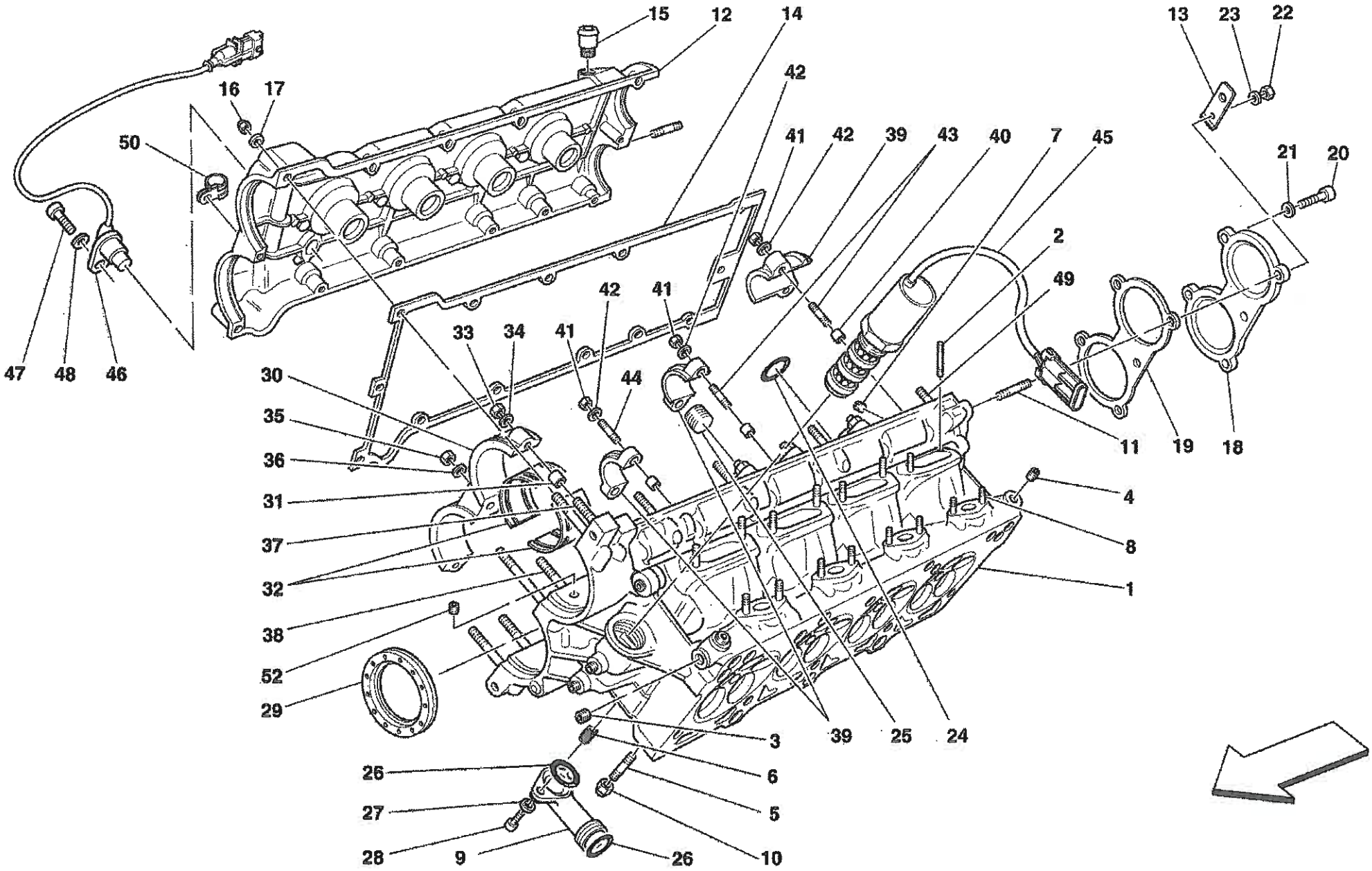
15
12
14
42
16
17
50
41
42
39
43
40
7
45
13
23
22
21
20
2
49
42
41
33
34
41
30
44
35
36
31
37
32
38
52
29
11
19
18
4
8
1
3
39
25
24
26
6
27
5
28
9
26
10

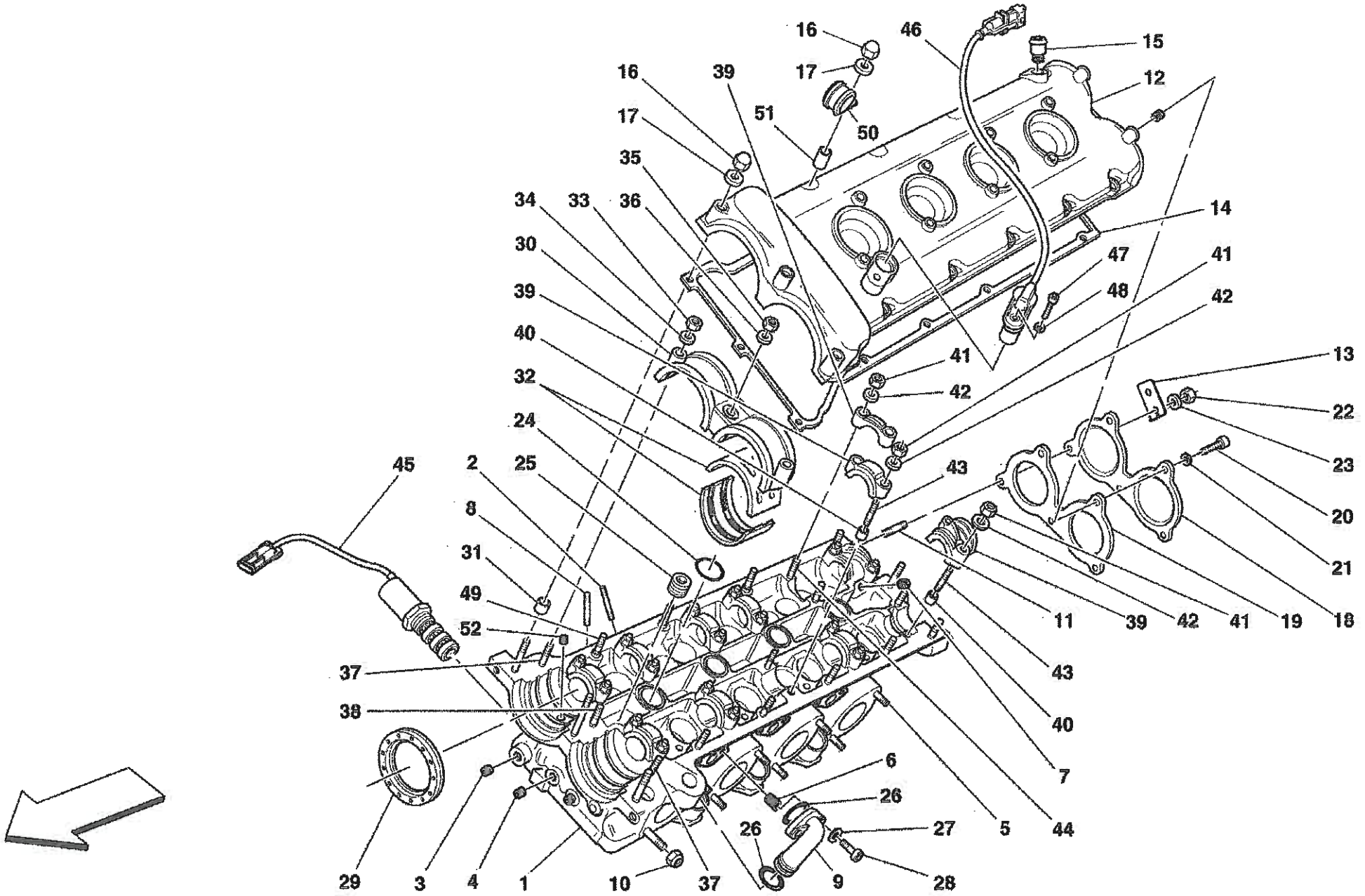
16
46
15
16
39
17
12
17
51
50
35
34
33
36
14
30
47
41
39
48
42
40
41
13
32
42
22
24
23
45
2
25
43
20
8
31
21
49
11
39
42
41
19
18
52
43
37
40
38
7
6
26
5
44
26
27
29
3
4
1
10
37
9
28

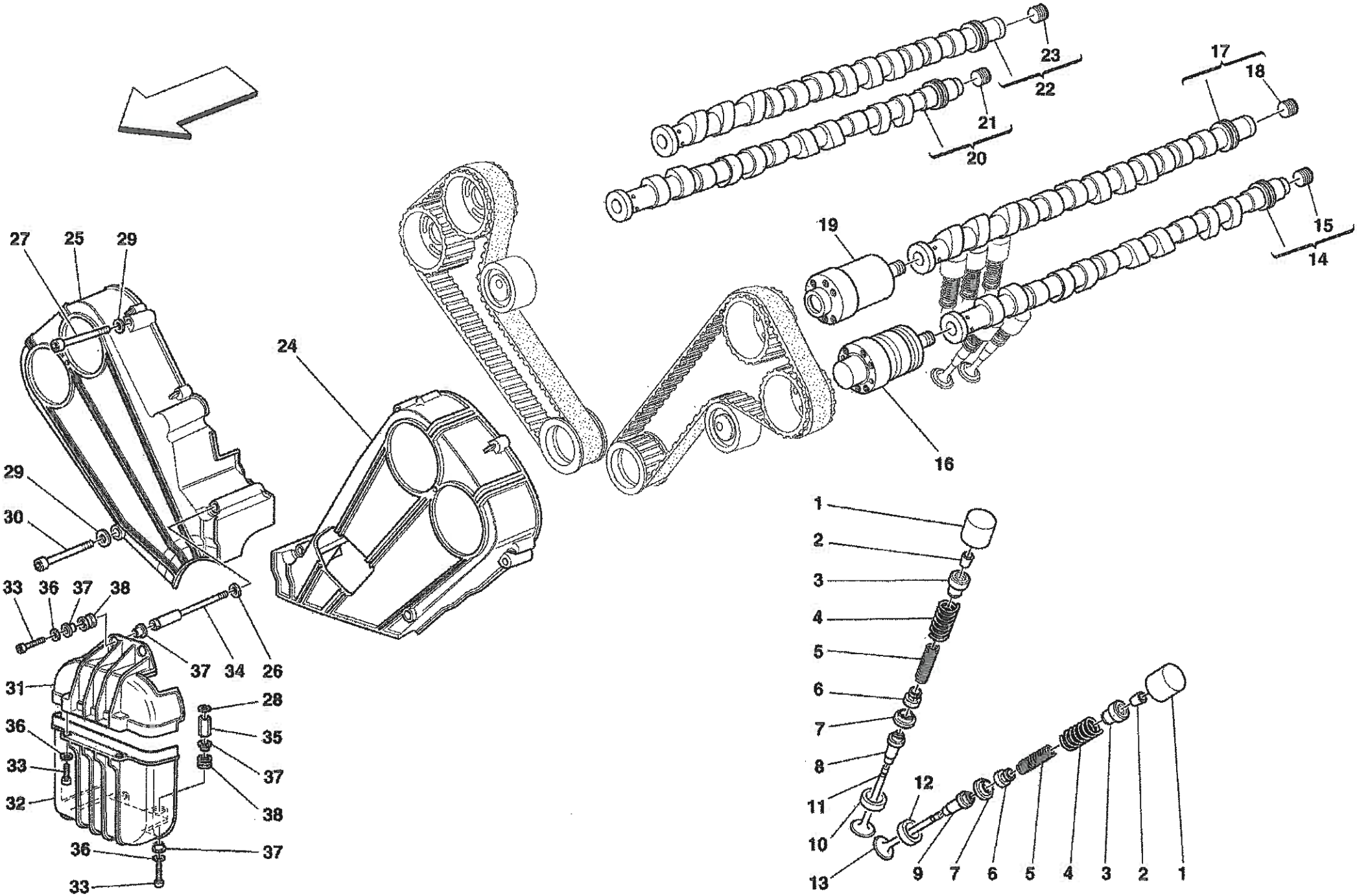
23
22
21
20
17
18
19
15
14
27
25
29
24
16
29
30
33
36
37
38
37
34
26
31
28
36
35
33
37
32
38
36
37
33
1
2
3
4
5
6
7
8
11
10
13
12
9
7
6
5
4
3
2
1

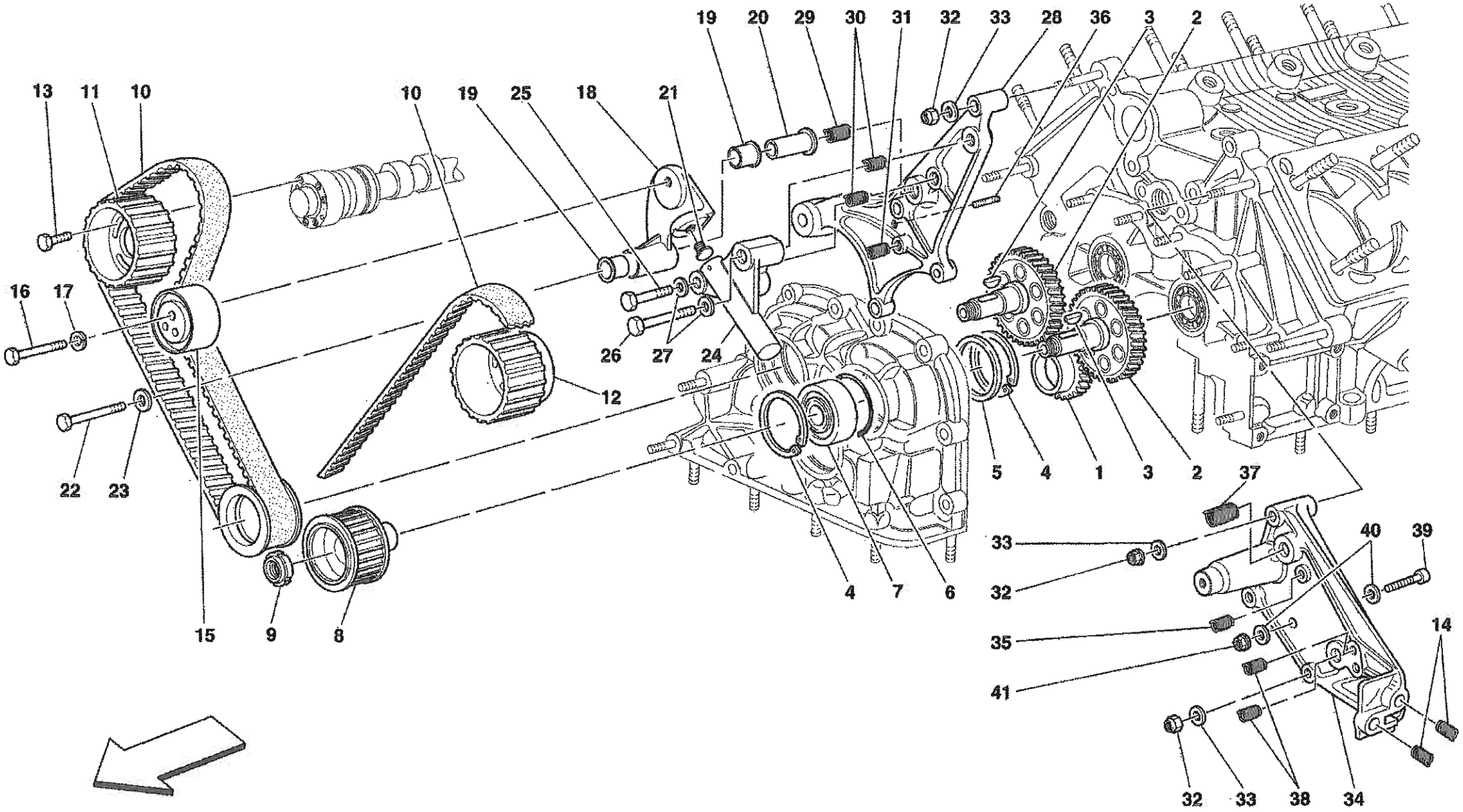
19
20
29
30
31
32
33
28
36
3
2
13
11
10
10
19
25
18
21
16
17
26
27
24
12
22
23
15
9
8
4
7
6
5
4
1
3
2
37
33
32
40
39
35
41
14
32
33
38
34

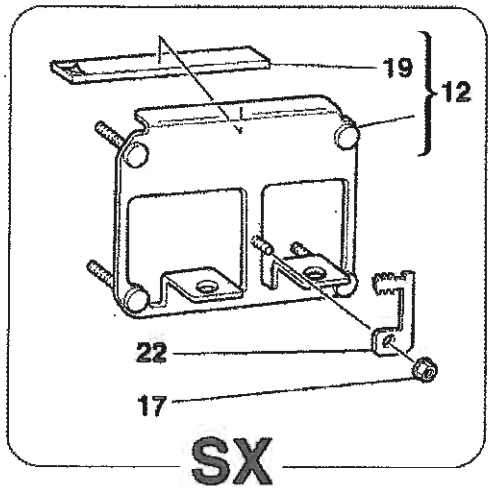
19
12
22
17
SX

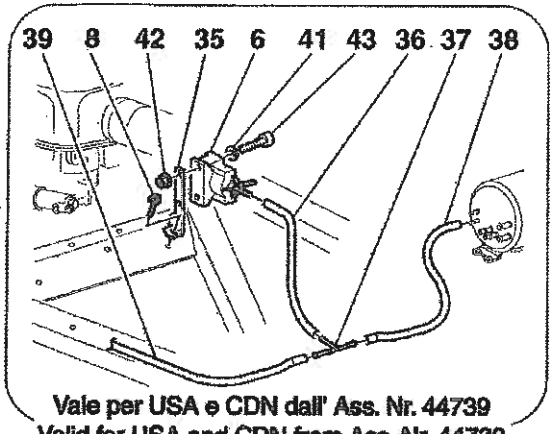

Vale per USA e CDN dall' Ass. Nr. 44739
Valid for USA and CDN from Ass. Nr. 44739

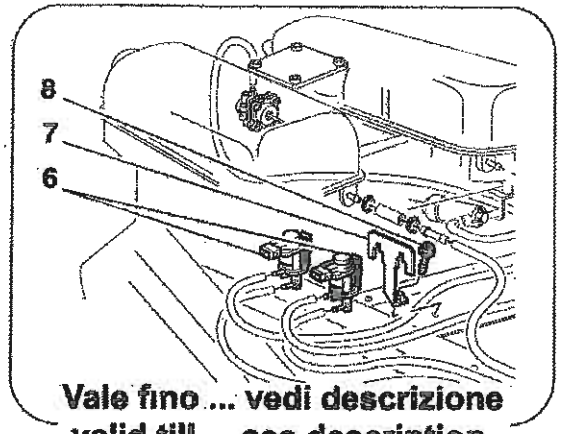

Vale fino ... vedi descrizione
valid till ... see description

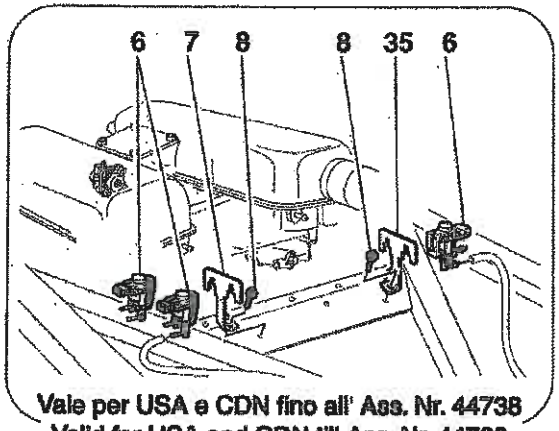

Vale per USA e CDN fino all' Ass. Nr. 44738
Valid for USA and CDN till Ass. Nr. 44738

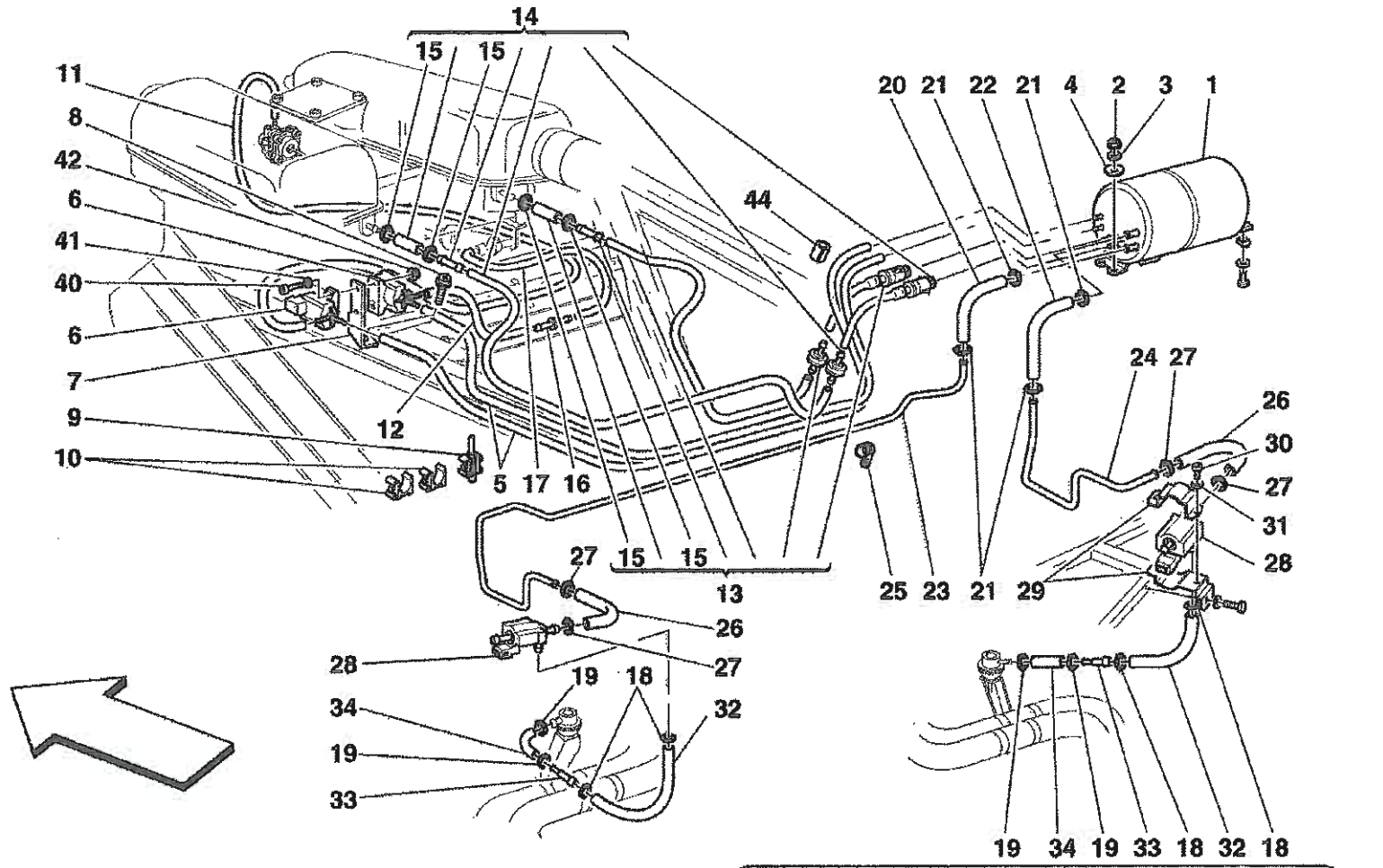

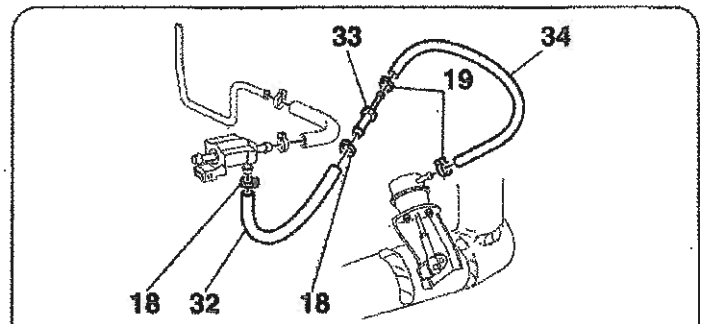

Vale per versione scarichi racing - optional
Valid for racing exhaust version - optional

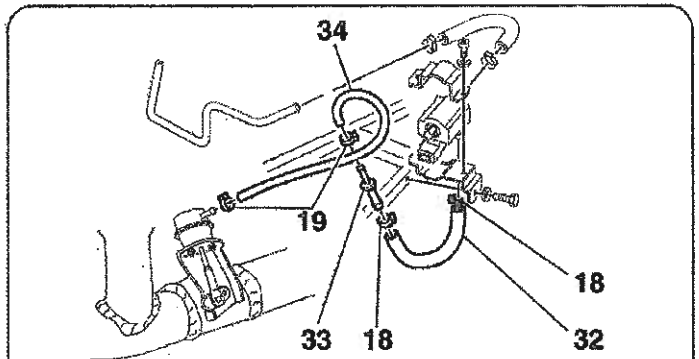

Vale per versione scarichi racing - optional
Valid for racing exhaust version - optional

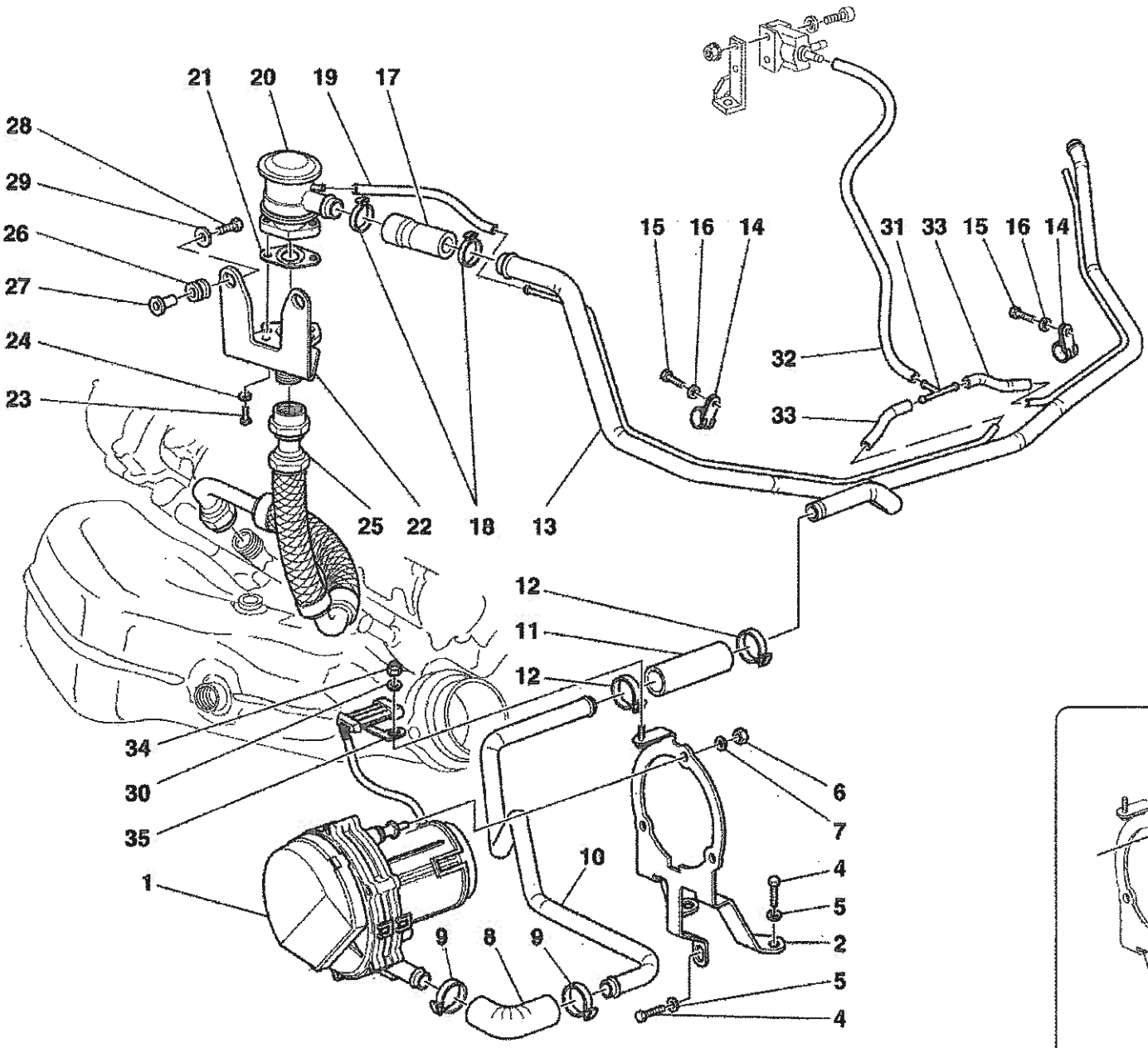

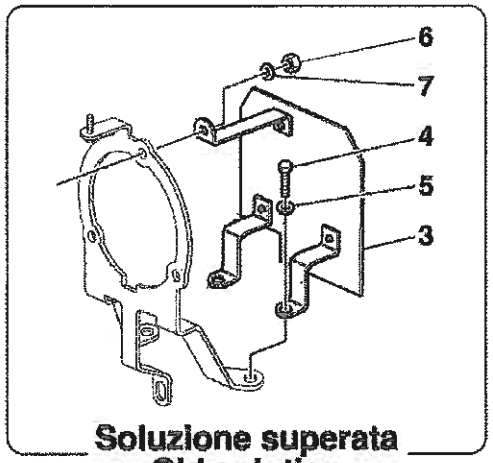

Soluzione superata
Old solution

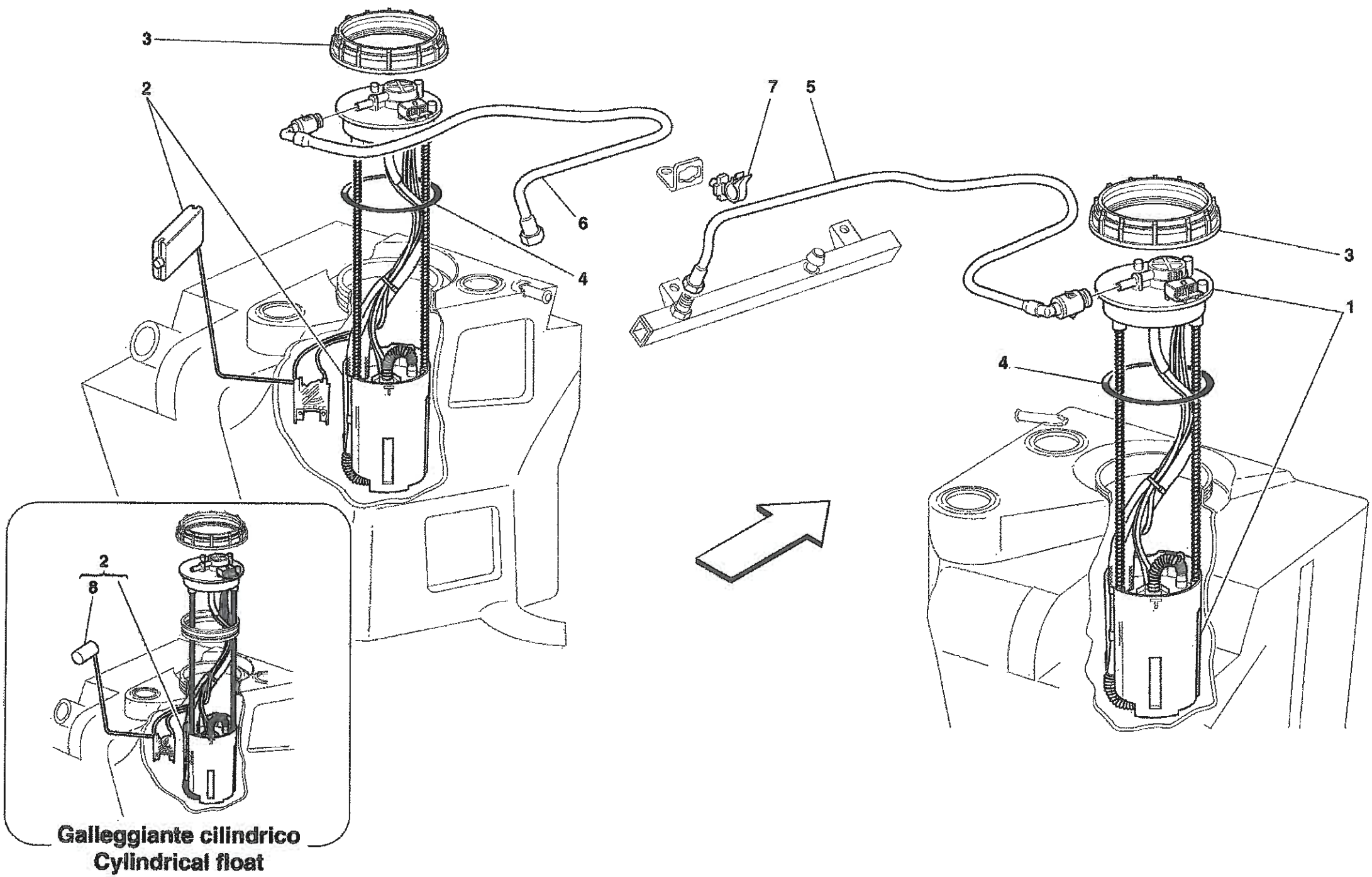
3
2
6
4
7
5
3
1
4
2
8
Galleggiante cilindrico
Cylindrical float

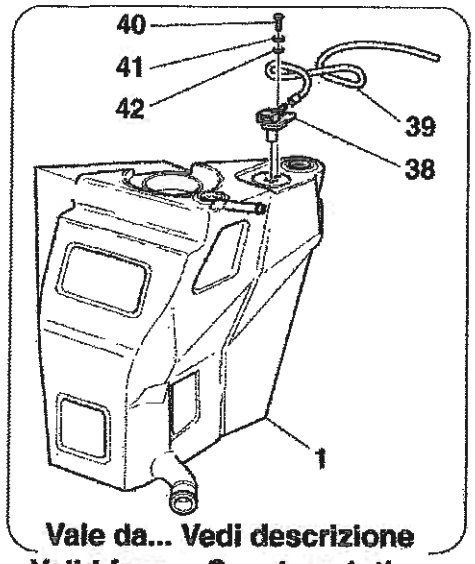

Vale da... Vedi descrizione
Valid from... See description

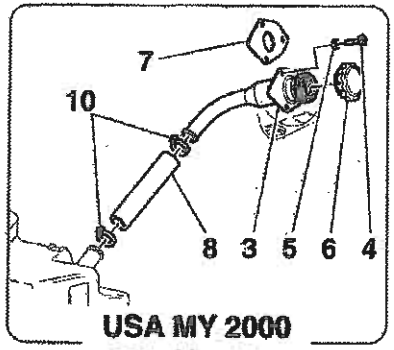

USA MY 2000
CDN MY 2000

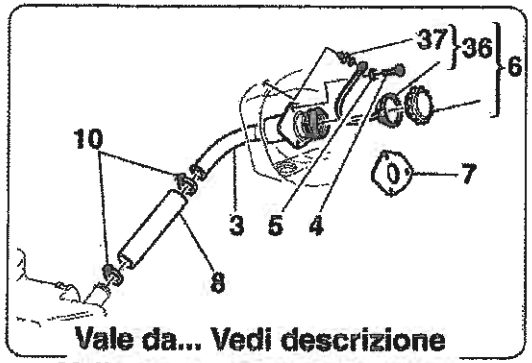

Vale da... Vedi descrizione
Valid from... See description

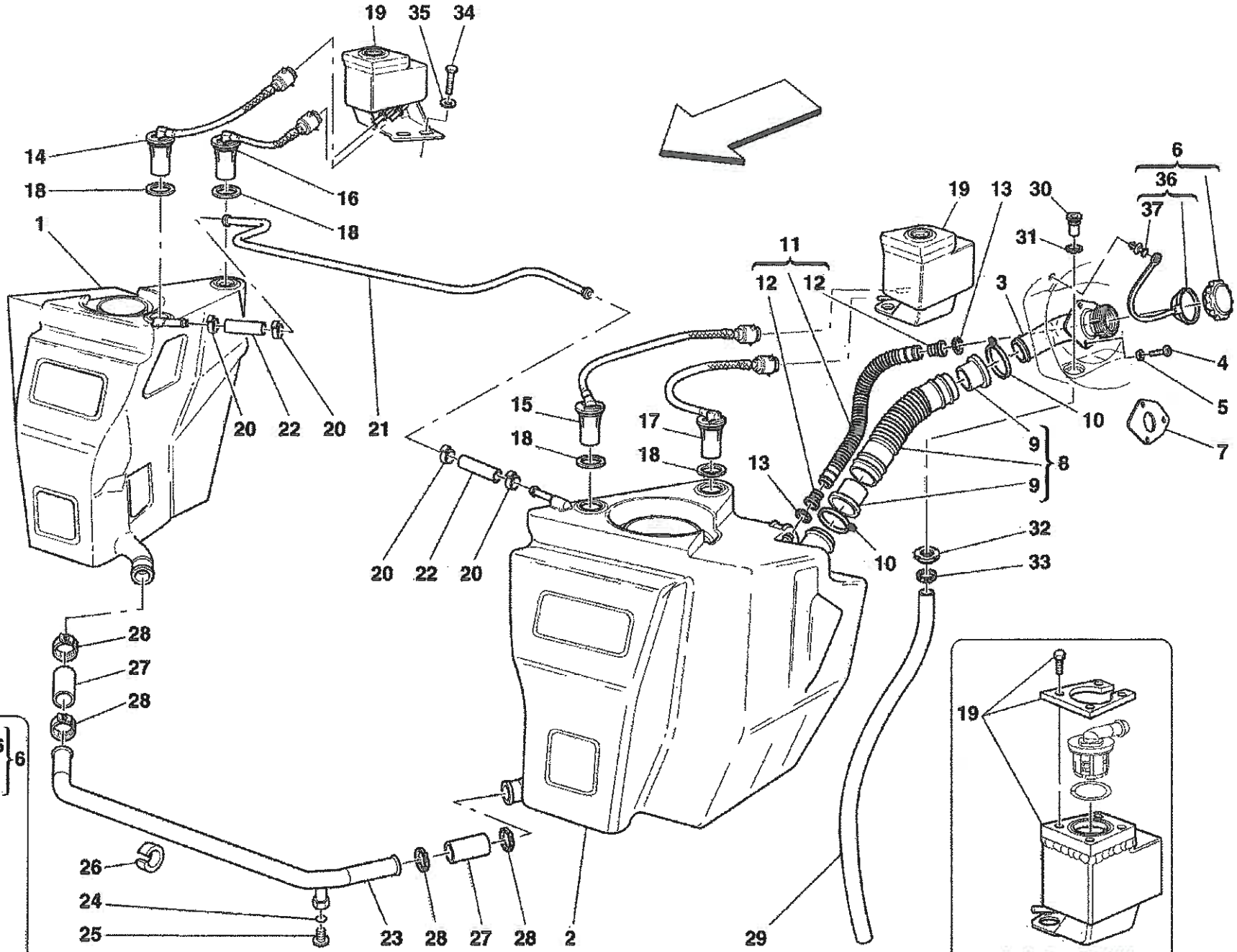

USA - CDN

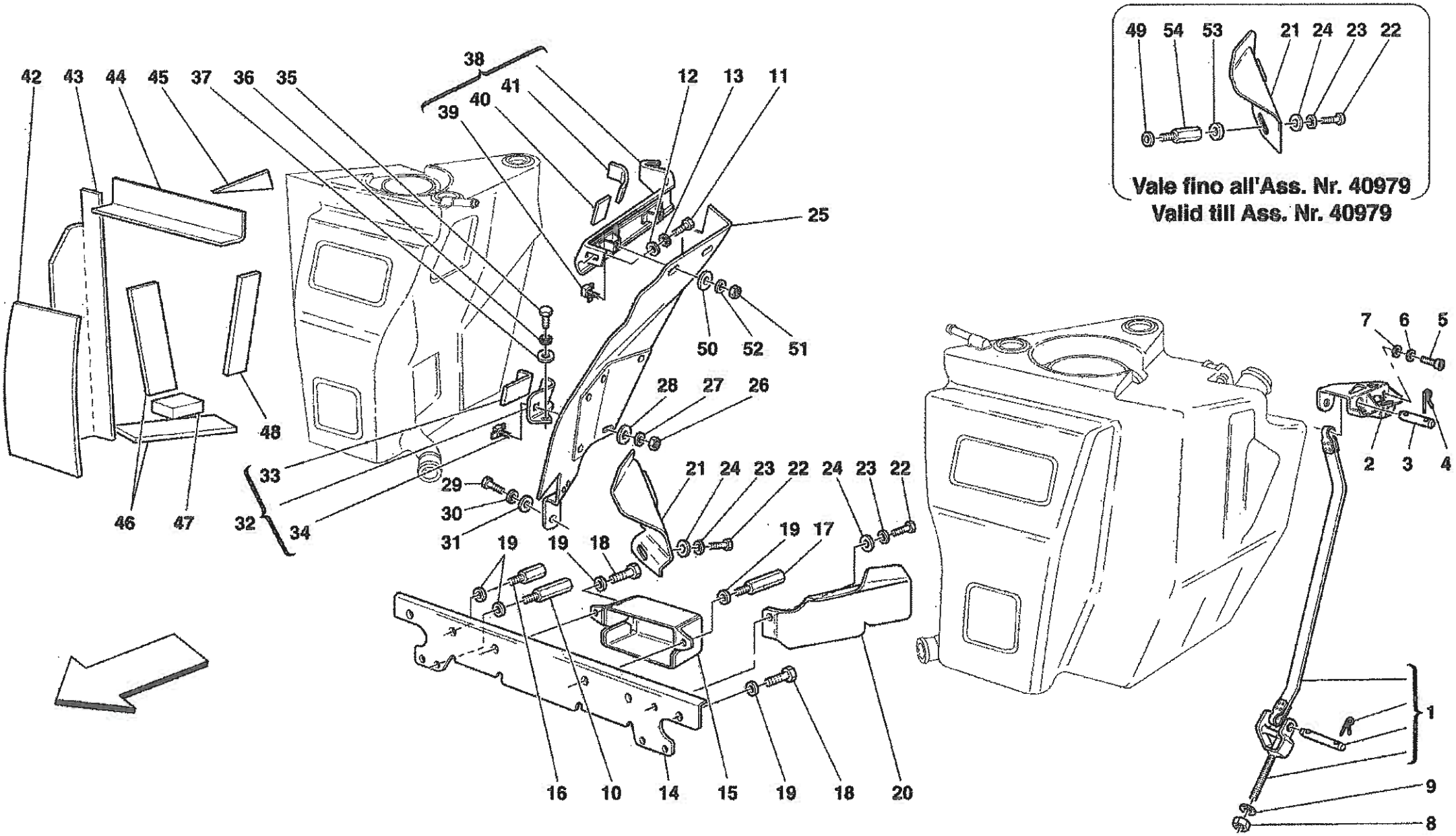
49 54 53 21 24 23 22
Vale fino all'Ass. Nr. 40979
Valid till Ass. Nr. 40979
42 43 44 45 37 36 35 38 39 40 41 12 13 11 25 50 52 51 48 46 47 33 32 34 29 30 31 28 27 26 21 24 23 22 24 23 22 19 19 18 19 17 16 10 14 15 19 18 20 7 6 5 2 3 4 1 9 8

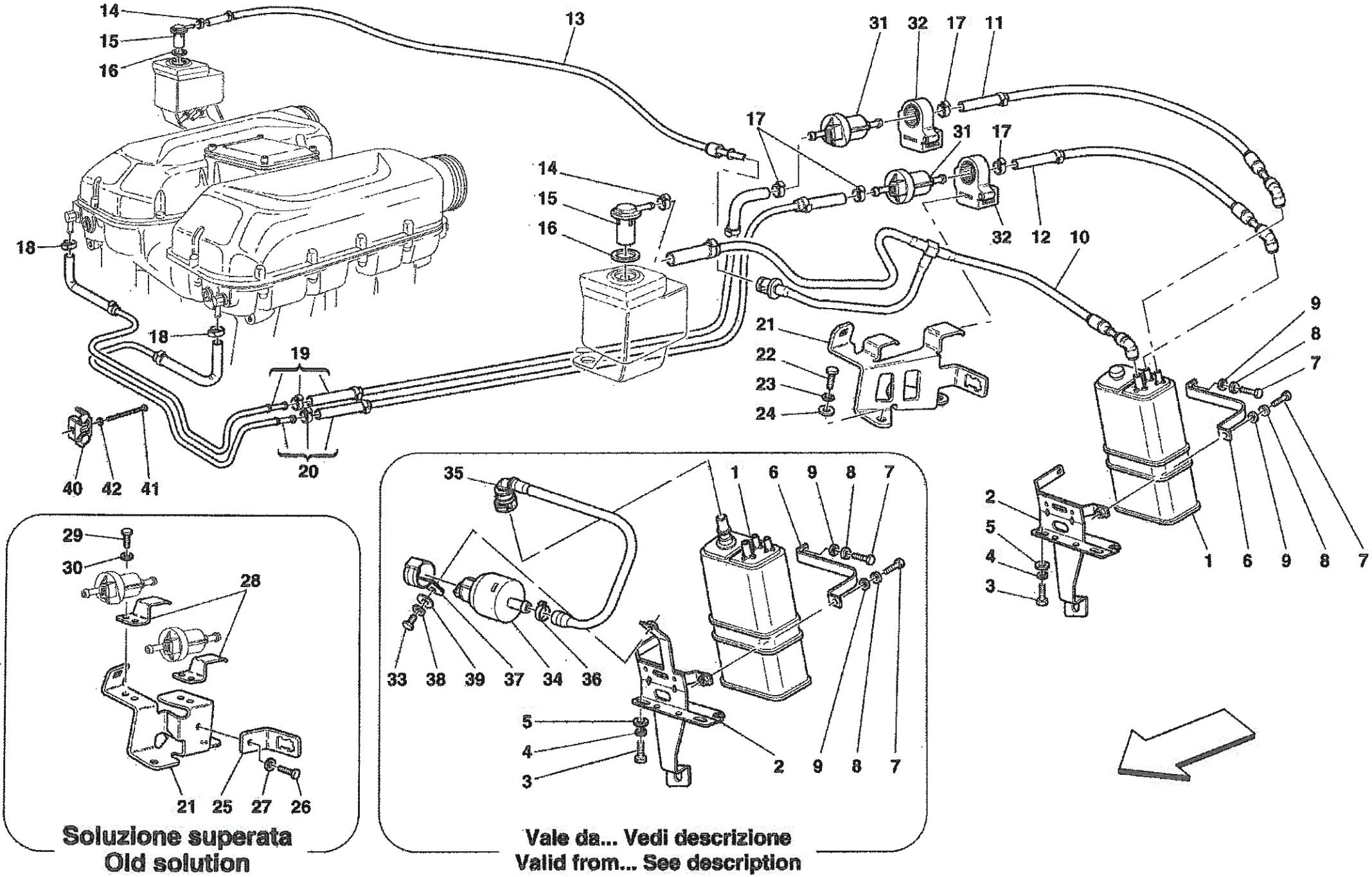
14
15
16
13
31
32
17
11
17
31
17
14
15
16
32
12
10
18
18
21
22
23
24
9
8
7
19
40
42
41
20
2
5
4
3
1
6
9
8
7
35
1
6
9
8
7
33
38
39
37
34
36
5
4
3
2
9
8
7
29
30
28
21
25
27
26
Soluzione superata
Old solution
Vale da... Vedi descrizione
Valid from... See description

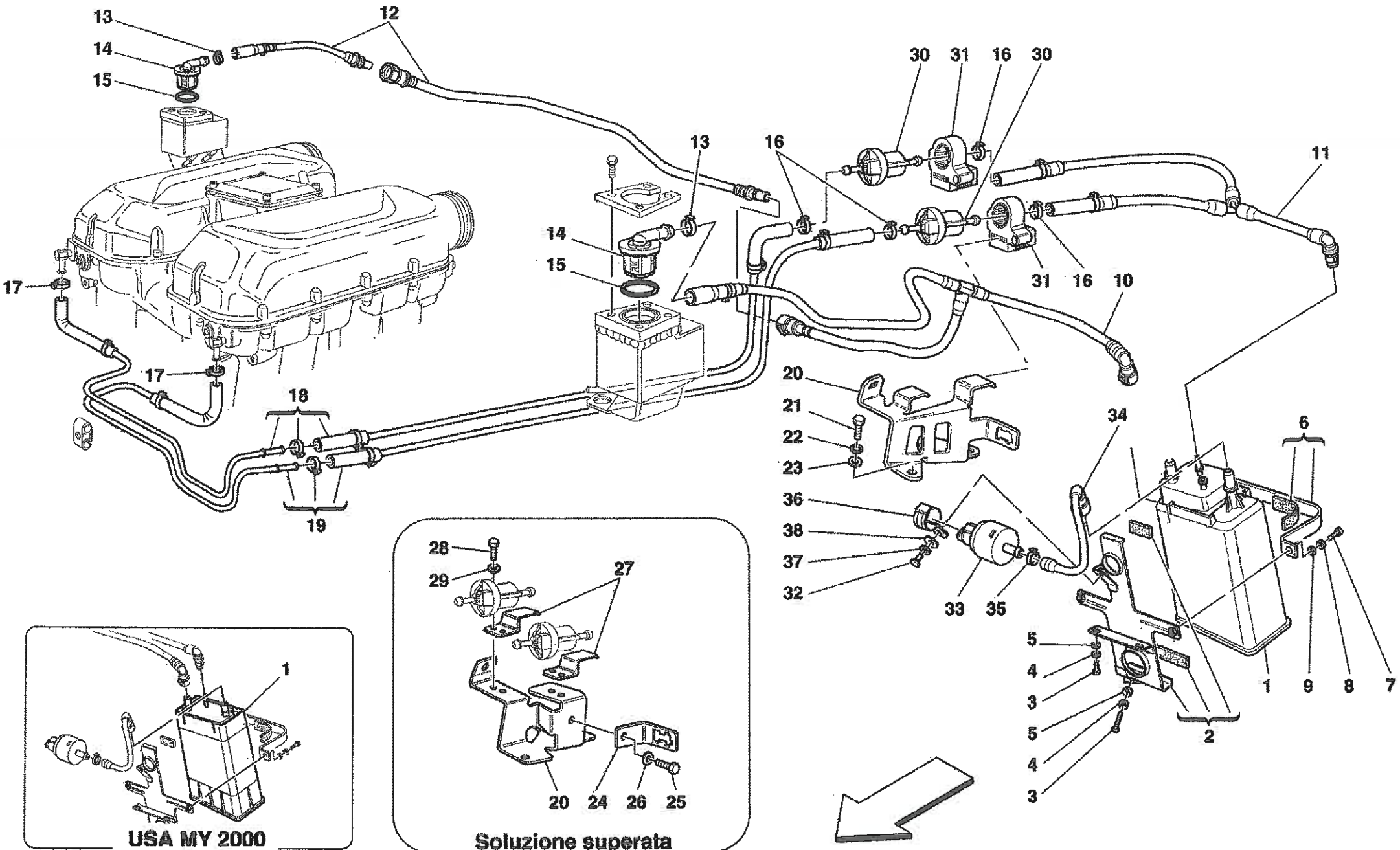
13
12
14
15
30
31
16
30
13
16
11
14
15
31
16
10
17
17
18
19
20
21
22
23
34
6
36
38
37
32
33
35
5
4
3
5
4
3
1
9
8
7
2
1
USA MY 2000
CDN MY 2000
28
29
27
20
24
26
25
Soluzione superata
Old solution

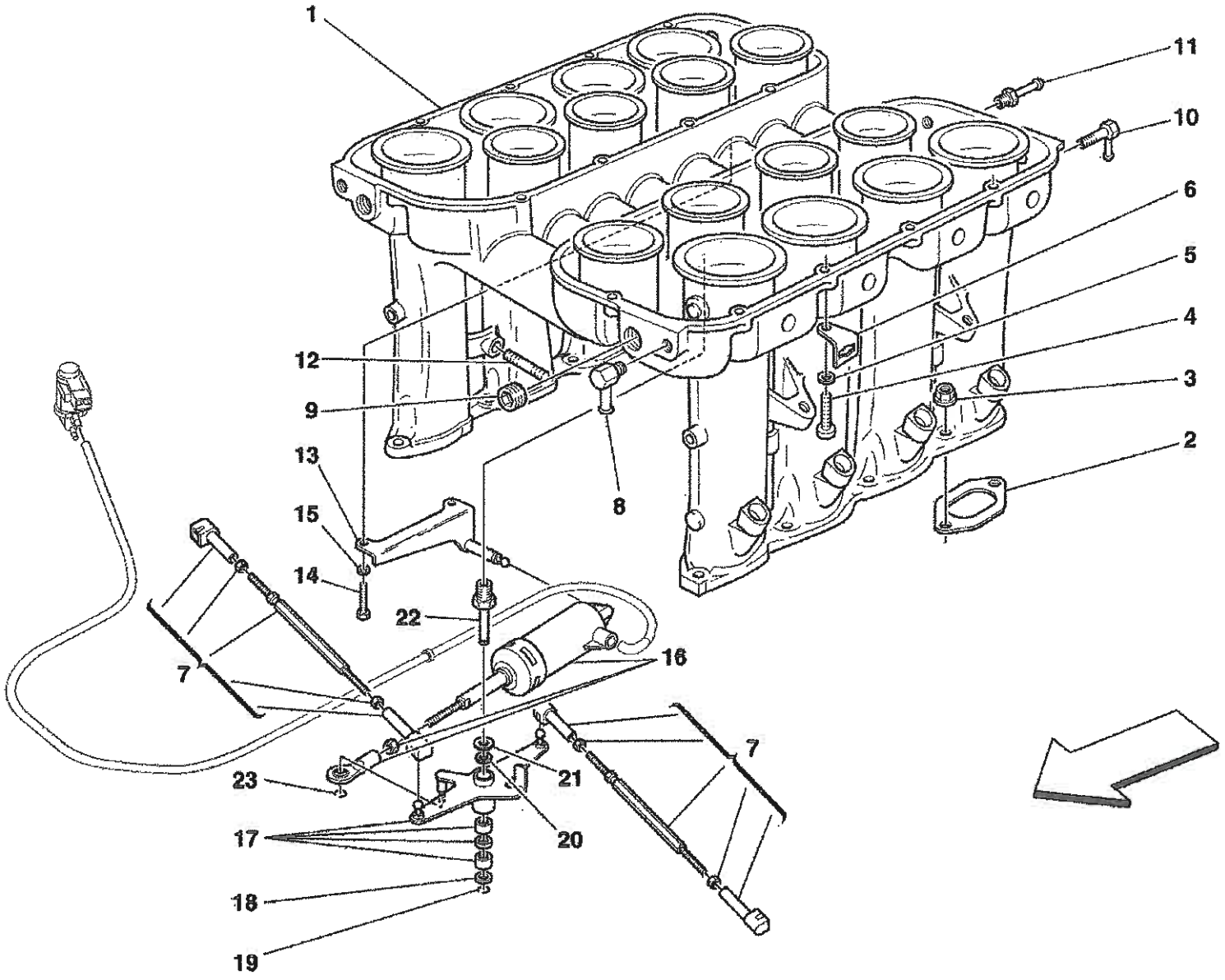
1
11
10
6
5
4
3
2
12
9
8
13
15
14
22
16
7
7
23
21
20
17
18
19

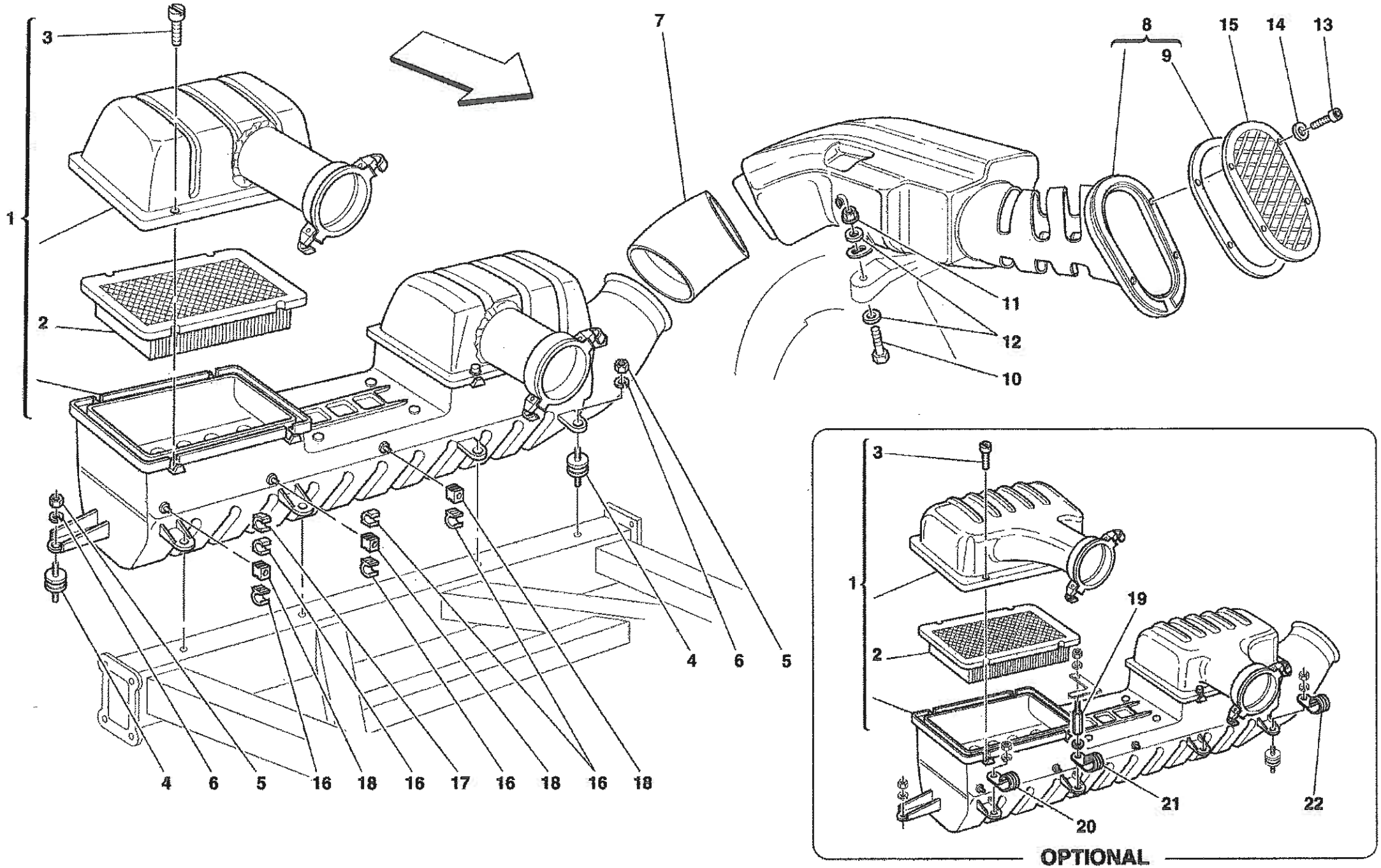
1
2
3
4
5
6
7
8
9
10
11
12
13
14
15
16
17
18
19
20
21
22
OPTIONAL

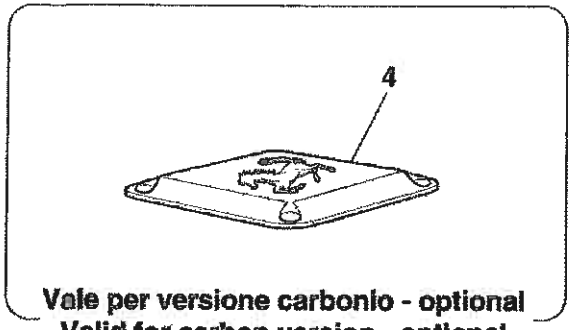
4
Vale per versione carbonio - optional
Valid for carbon version - optional

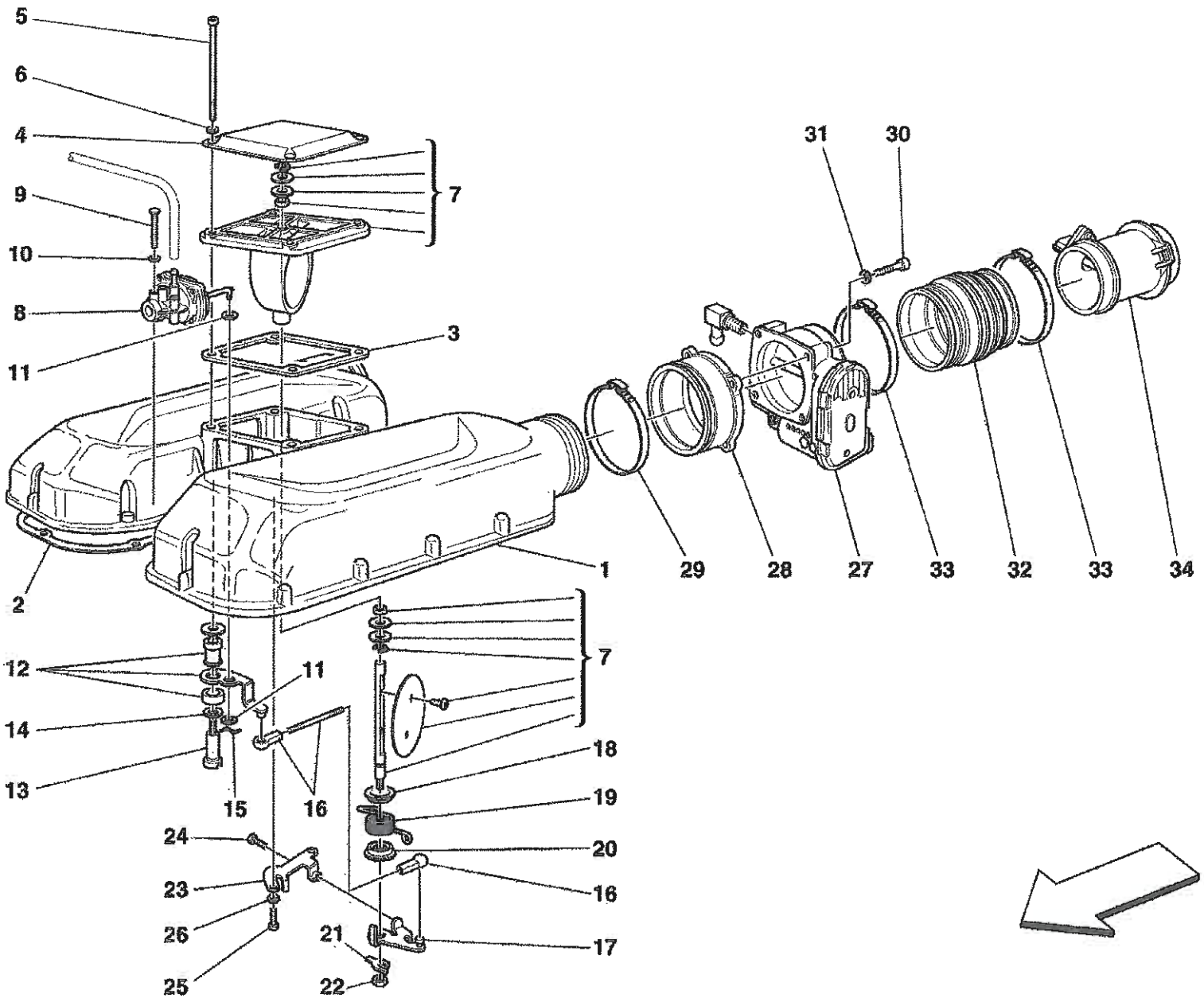
5
6
4
9
10
8
11
3
7
2
1
31
30
29
28
27
33
32
33
34
12
11
14
13
15
16
7
18
19
20
16
17
24
23
26
25
21
22

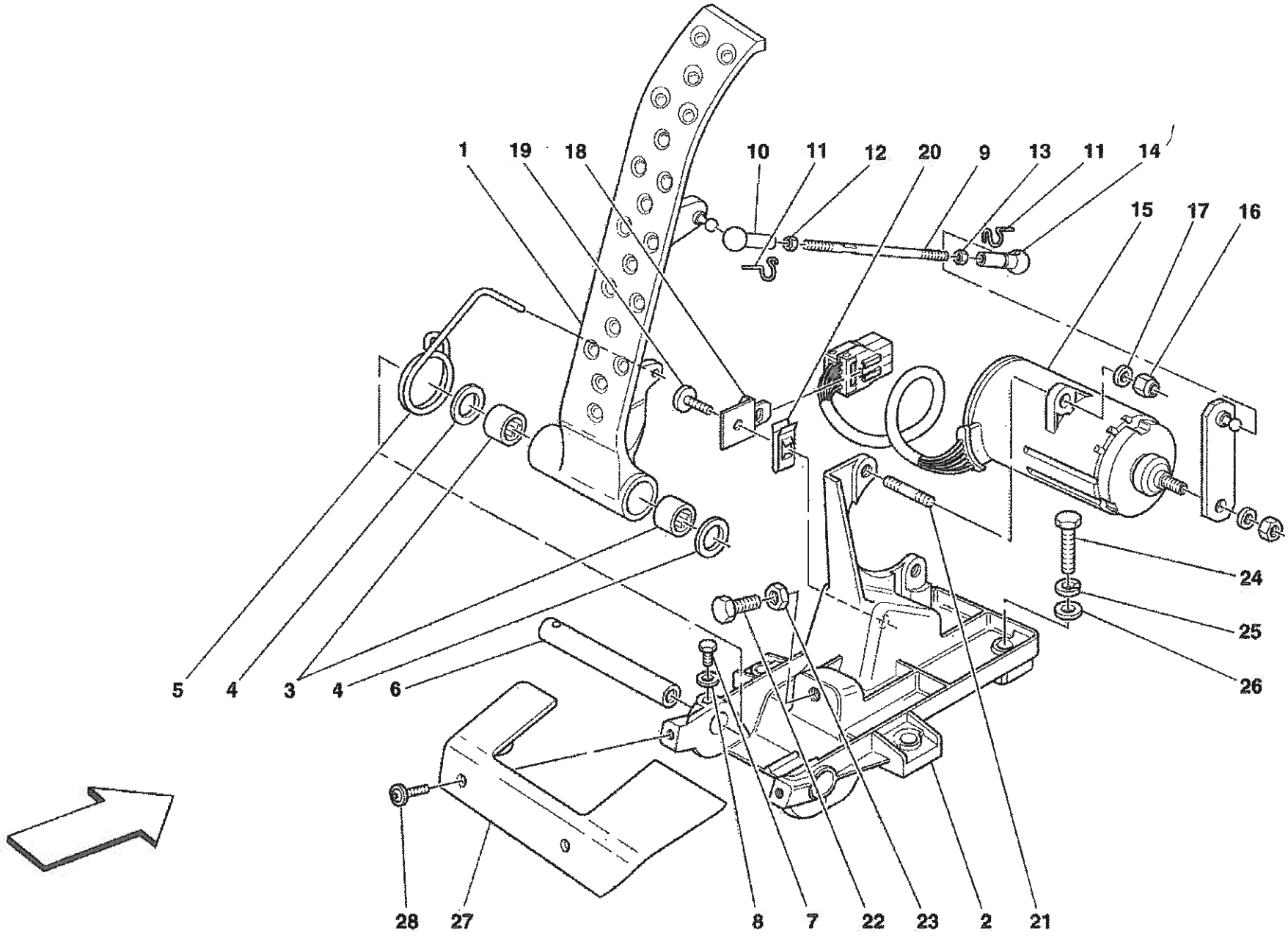
1
19
18
10
11
12
20
9
13
11
14
15
17
16
24
25
26
5
4
3
4
6
28
27
8
7
22
23
2
21

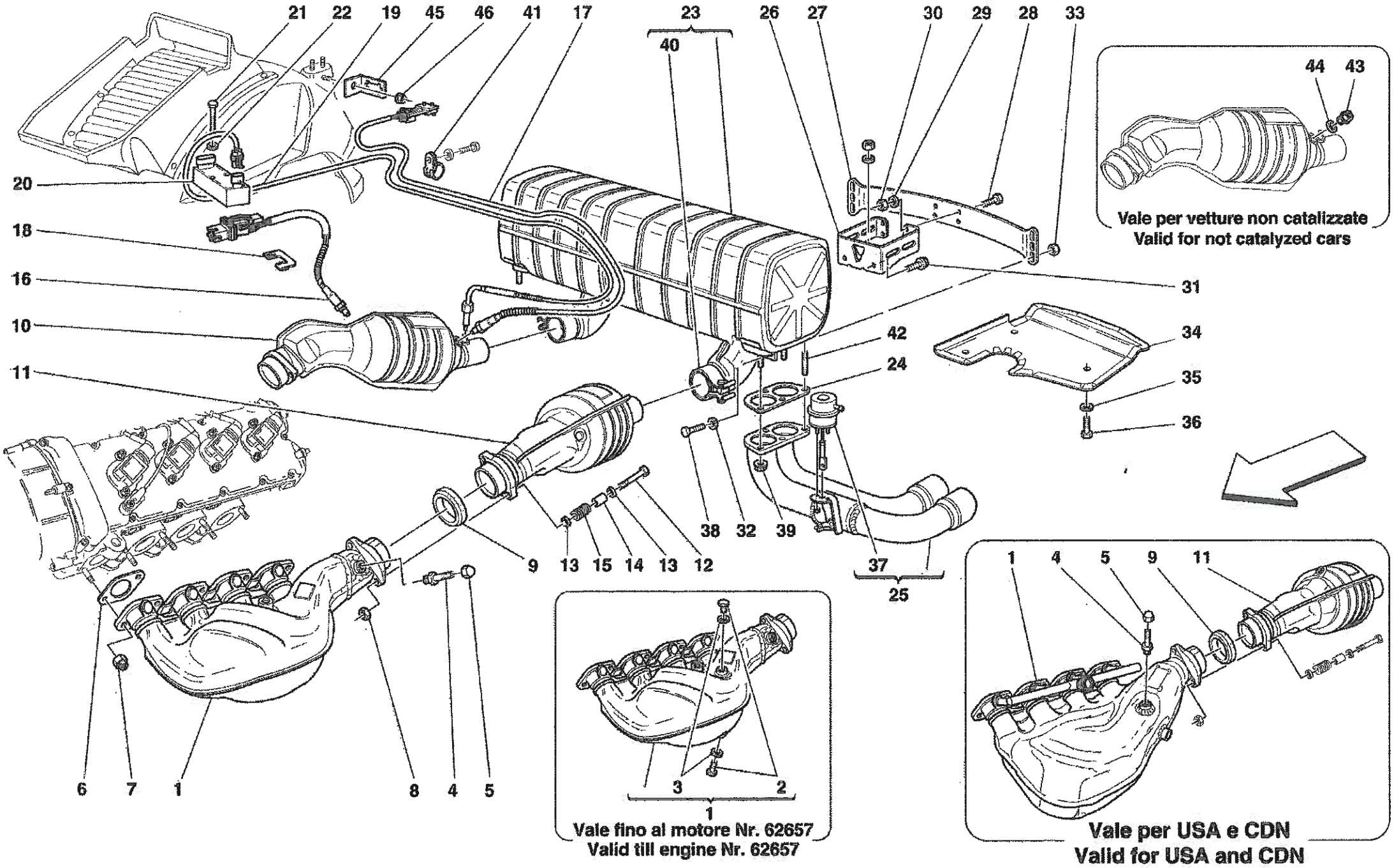
21 22 19 45 46 41 17 23 26 27 30 29 28 33
40
20
18
16
10
11
31
42
24
34
35
36
38 32 39
9 13 15 14 13 12
37
25
6 7 1 8 4 5
44 43
Vale per vetture non catalizzate
Valid for not catalyzed cars
3 2
1
Vale fino al motore Nr. 62657
Valid till engine Nr. 62657
1 4 5 9 11
Vale per USA e CDN
Valid for USA and CDN

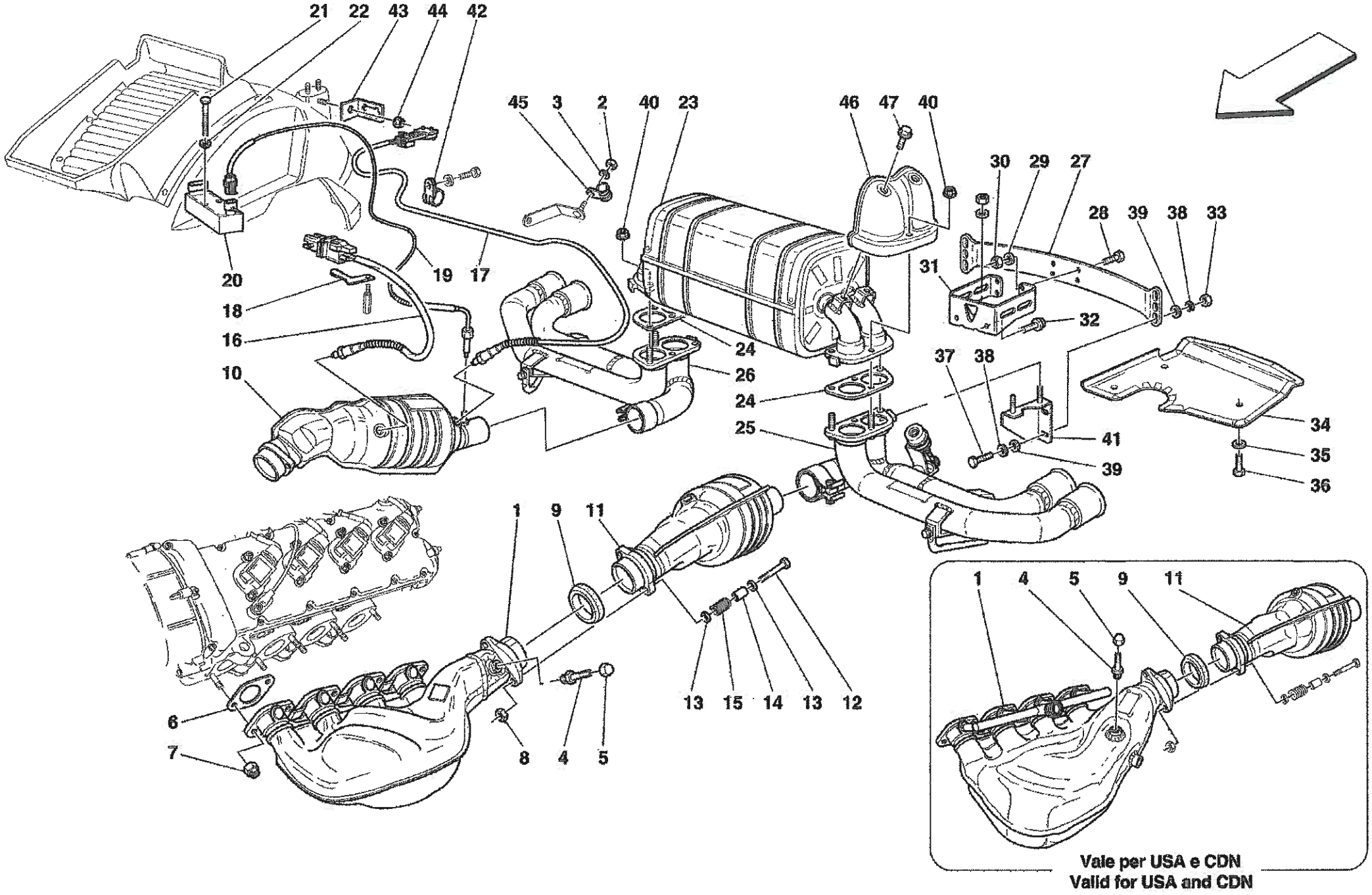
21 22 43 44 42
45 3 2 40 23
46 47 40
30 29 27
28 39 38 33
31
32
20
19 17
18
16
10
24
26
24
25
37 38
41
39
34
35
36
1 9 11
6
7
8 4 5
13 15 14 13 12
1 4 5 9 11
Vale per USA e CDN
Valid for USA and CDN

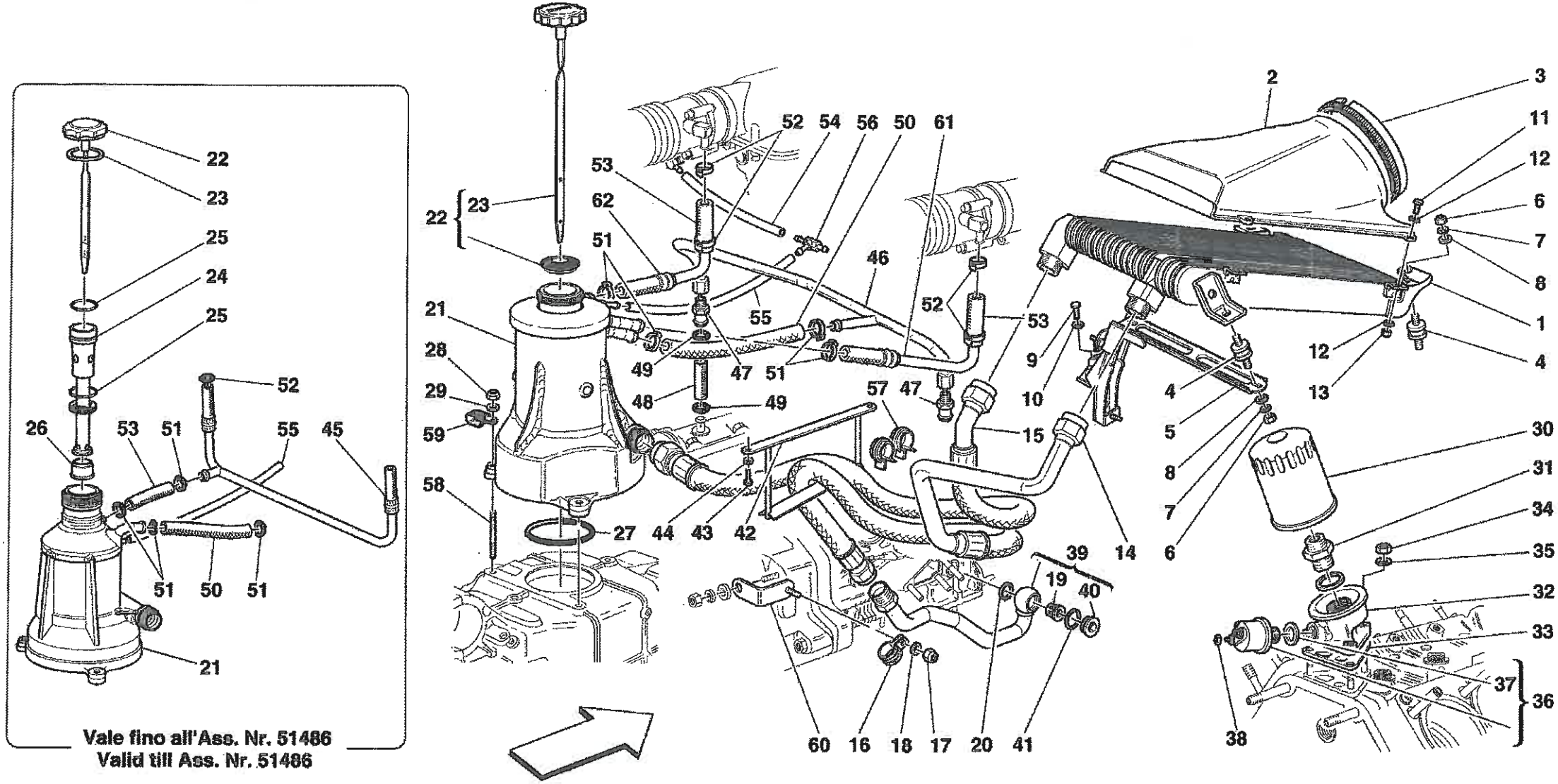

Vale fino all'Ass. Nr. 51486
Valid till Ass. Nr. 51486

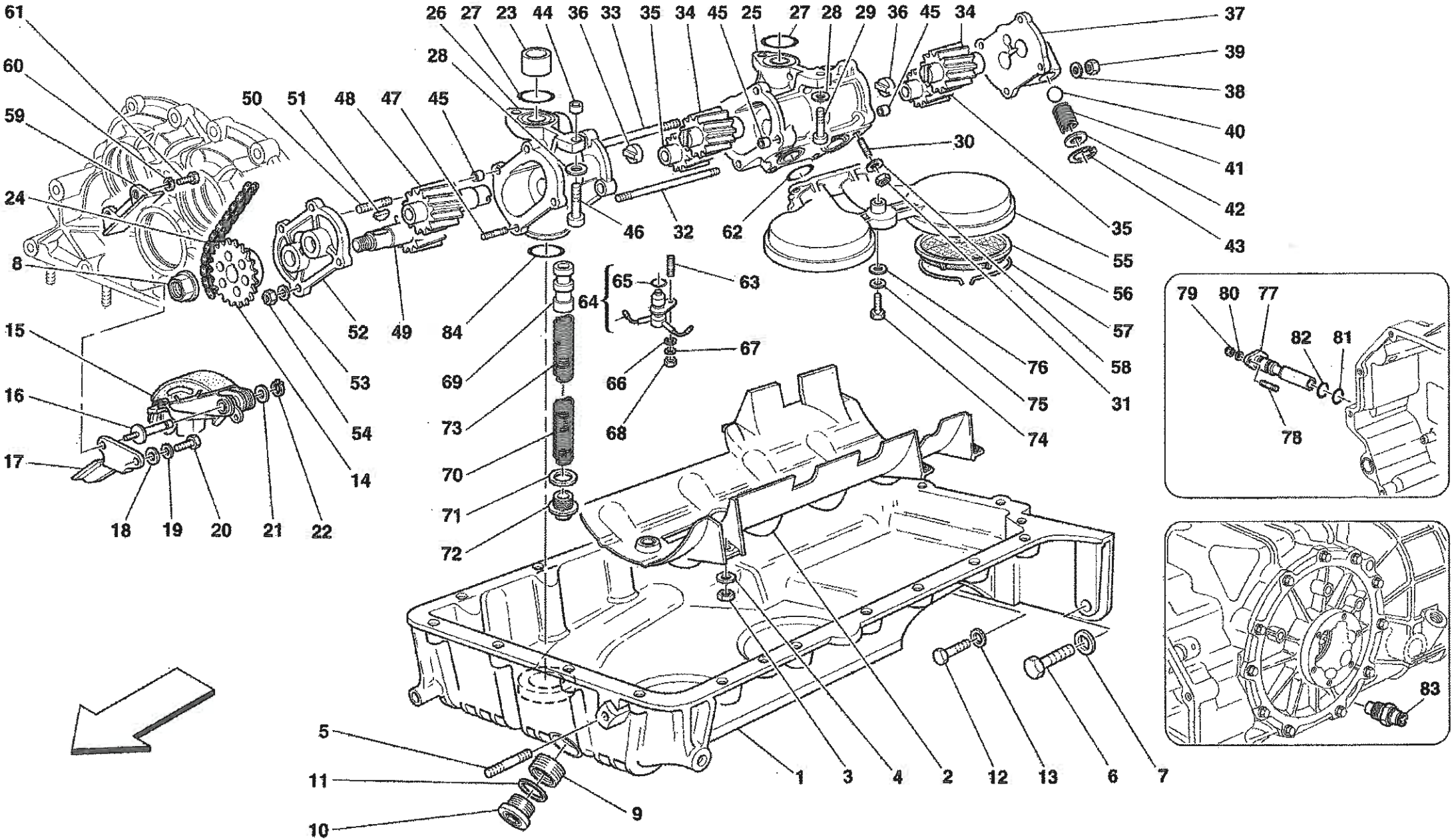
61
60
59
24
8
15
16
17
18
19
20
21
22
14
54
53
52
49
50
51
48
47
45
26
27
23
44
36
33
35
34
45
25
27
28
29
36
45
34
28
46
32
62
30
37
39
38
40
41
42
43
35
55
56
57
58
31
76
75
74
84
64
65
63
69
73
70
71
72
66
68
67
5
11
10
9
1
3
4
2
12
13
6
7
79
80
77
82
81
78
83

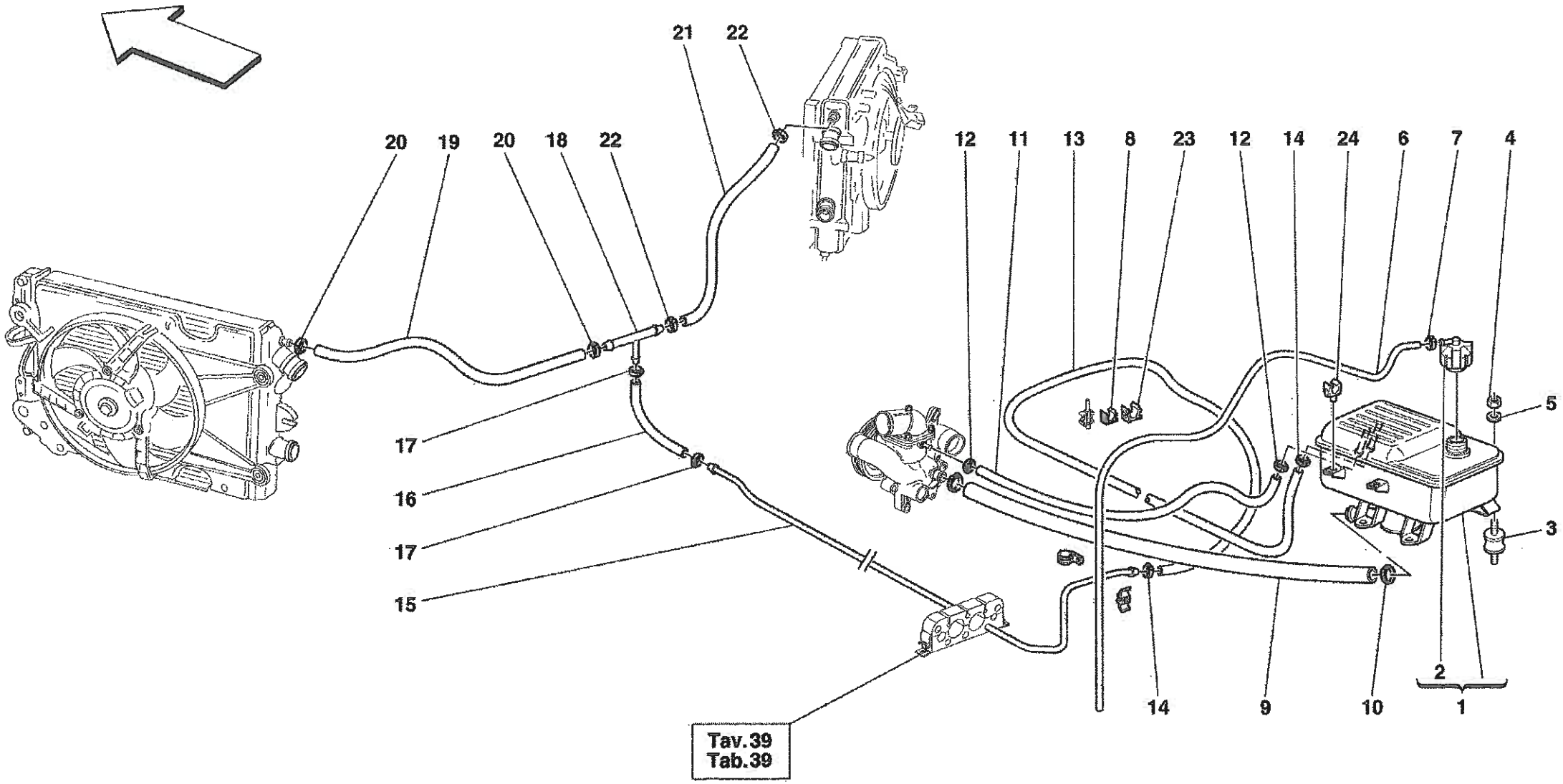
21
22
20
19
20
18
22
12
11
13
8
23
12
14
24
6
7
4
5
3
17
16
17
15
2
1
14
9
10
Tav.39
Tab.39

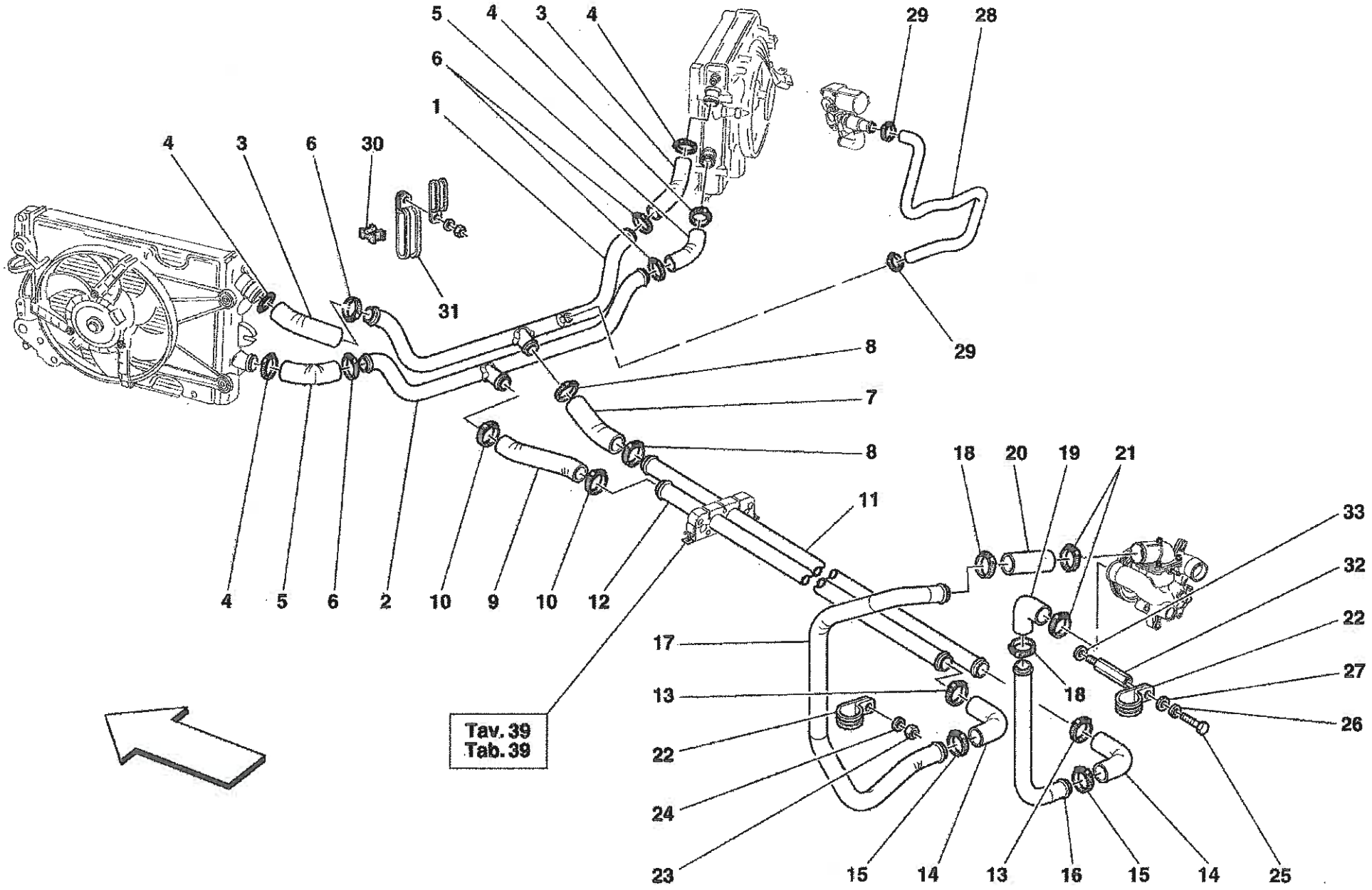
5
4
3
4
6
1
29
28
4
3
6
30
31
29
8
7
8
11
4
5
6
2
10
9
10
12
18
20
19
21
33
32
22
27
26
17
13
18
22
24
23
15
14
13
16
15
14
25
Tav. 39
Tab. 39

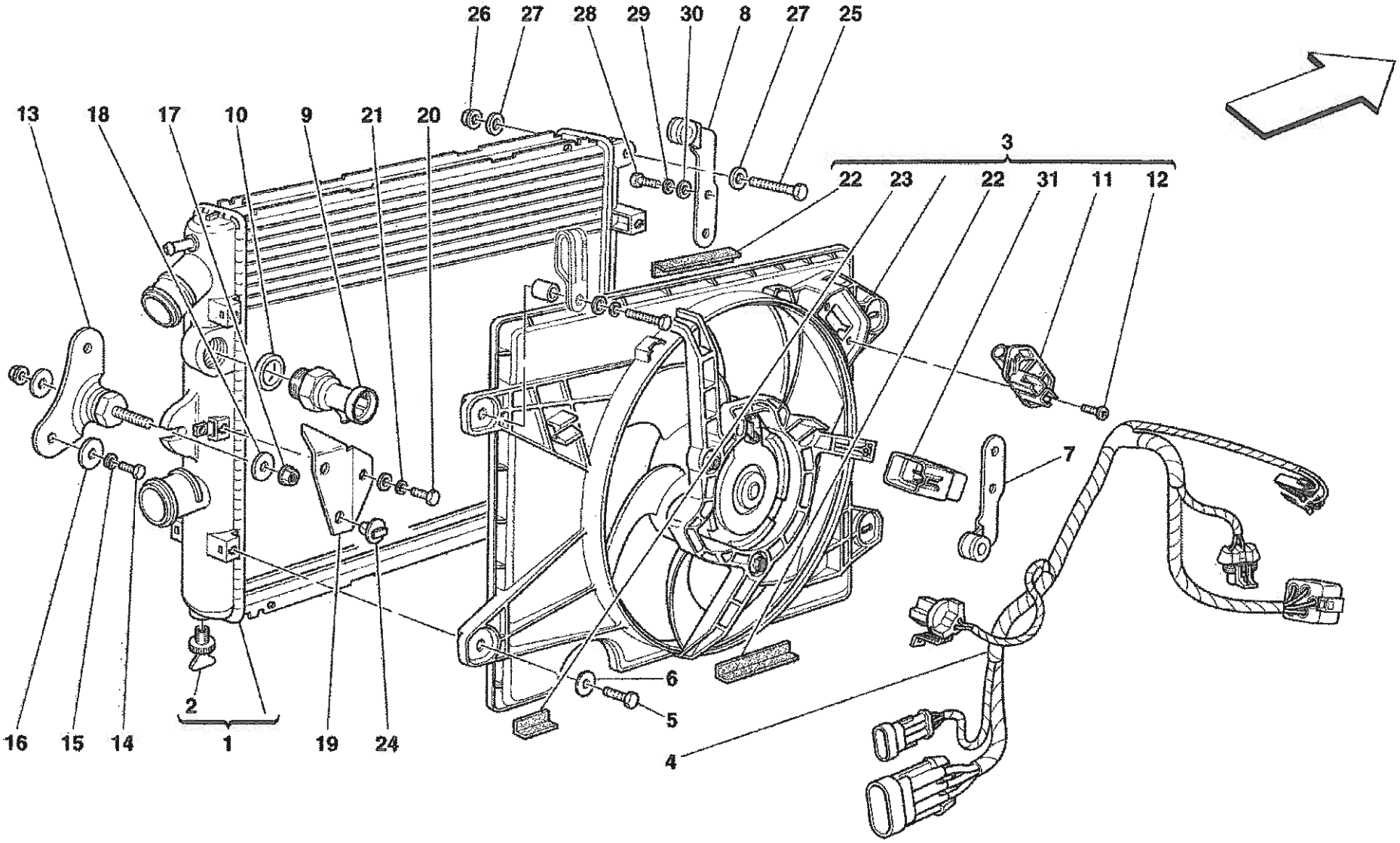
26
27
28
29
30
8
27
25
13
18
17
10
9
21
20
3
22
23
22
31
11
12
7
6
5
4
2
1
16
15
14
19
24

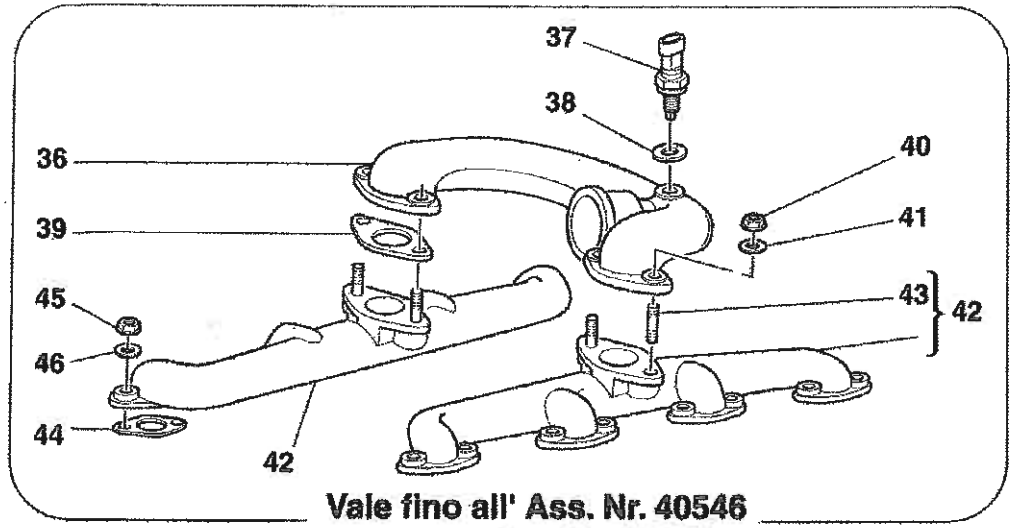

Vale fino all' Ass. Nr. 40546
Valid till Ass. Nr. 40546

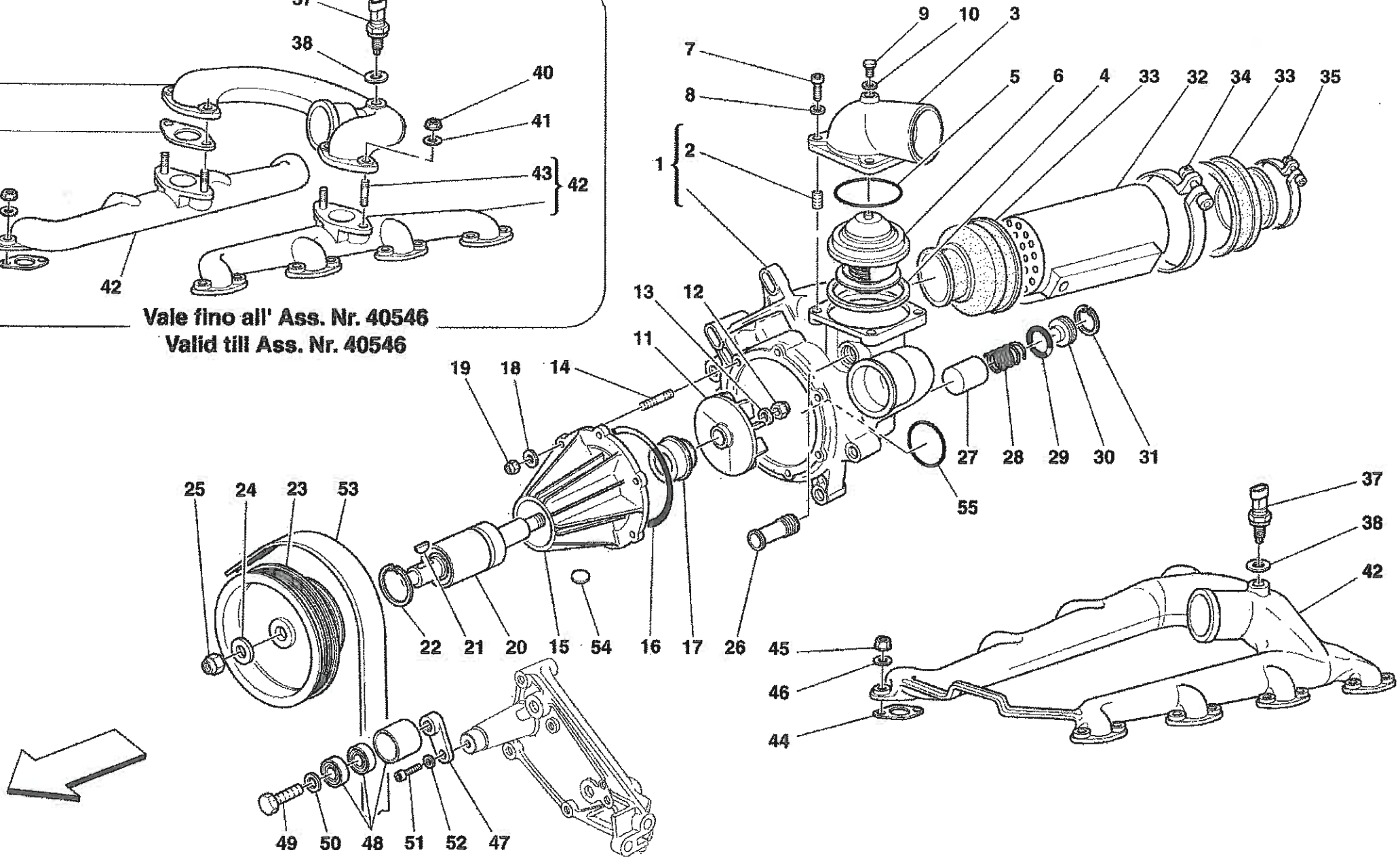

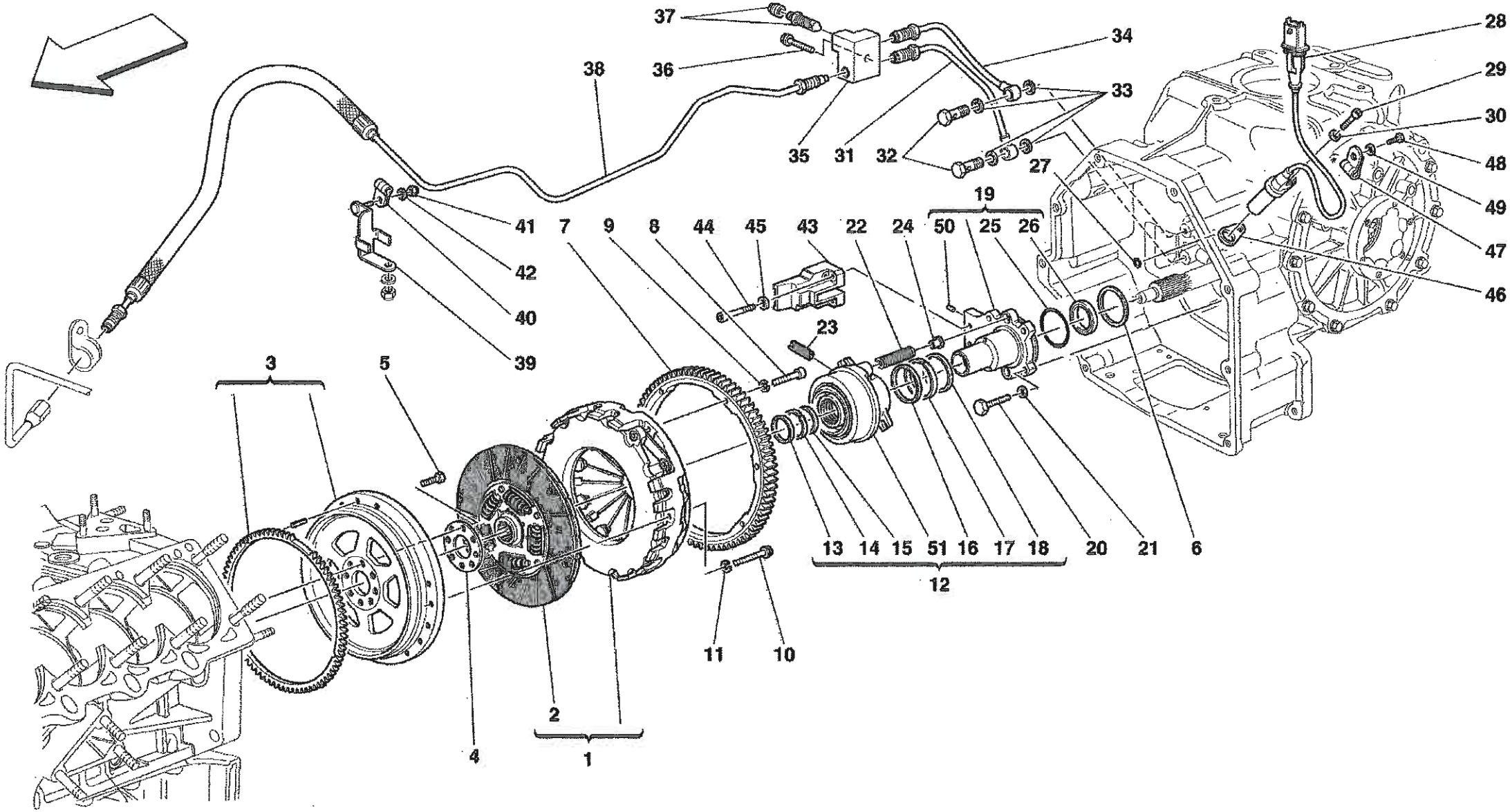
37
36
38
34
33
35
31
32
28
29
30
48
49
47
46
27
19
41
7
9
8
44
45
43
22
24
50
25
26
42
40
39
23
3
5
13
14
15
51
16
17
18
20
21
6
12
11
10
2
4
1

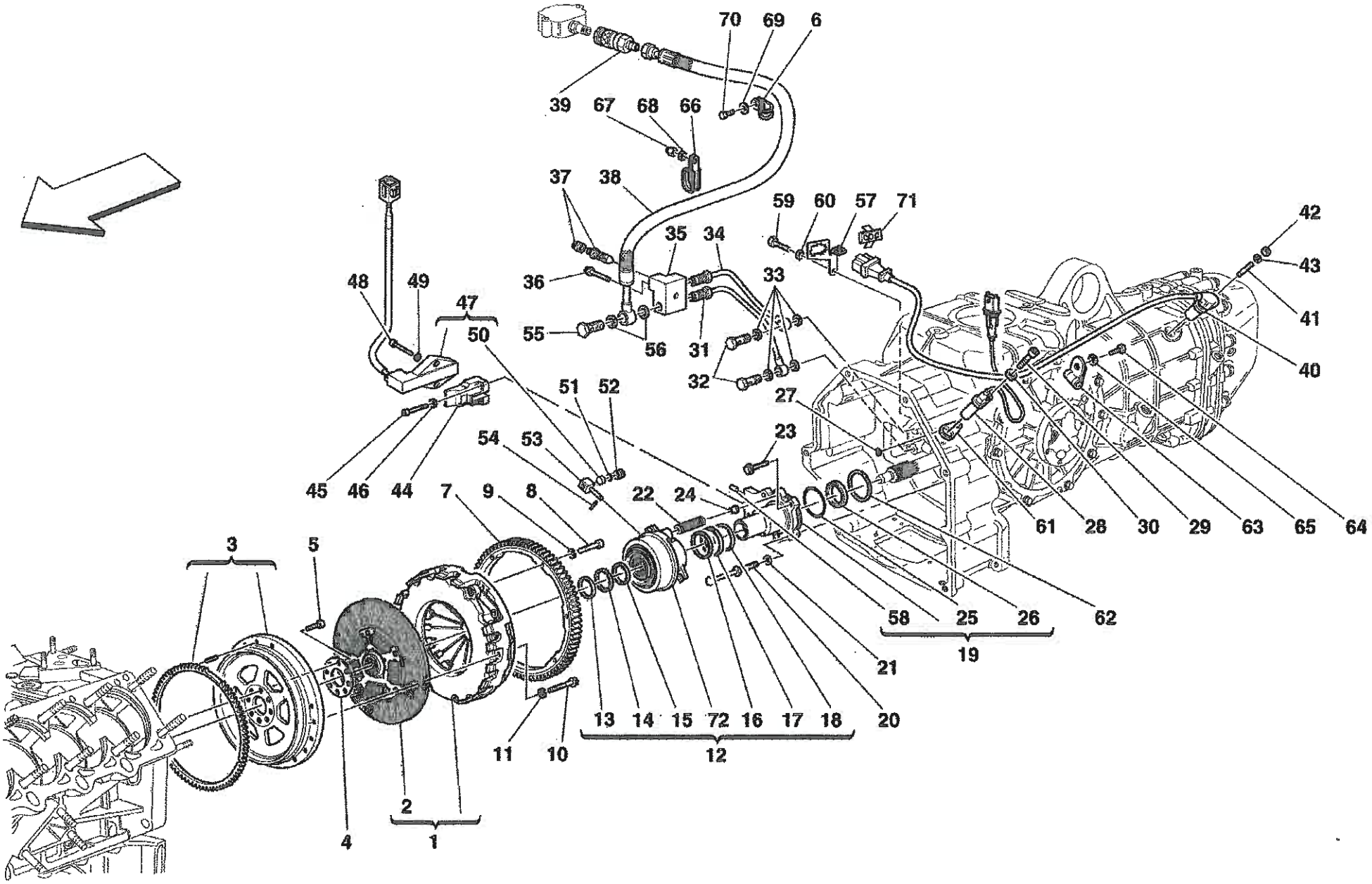
70
69
6
39
67
68
66
37
38
59
60
57
71
42
35
34
43
48
49
36
33
41
47
50
55
56
31
40
32
51
52
27
54
53
23
45
46
44
7
9
8
22
24
61
28
30
29
63
65
64
3
5
58
25
26
62
19
21
13
14
15
72
16
17
18
20
11
10
12
2
4
1

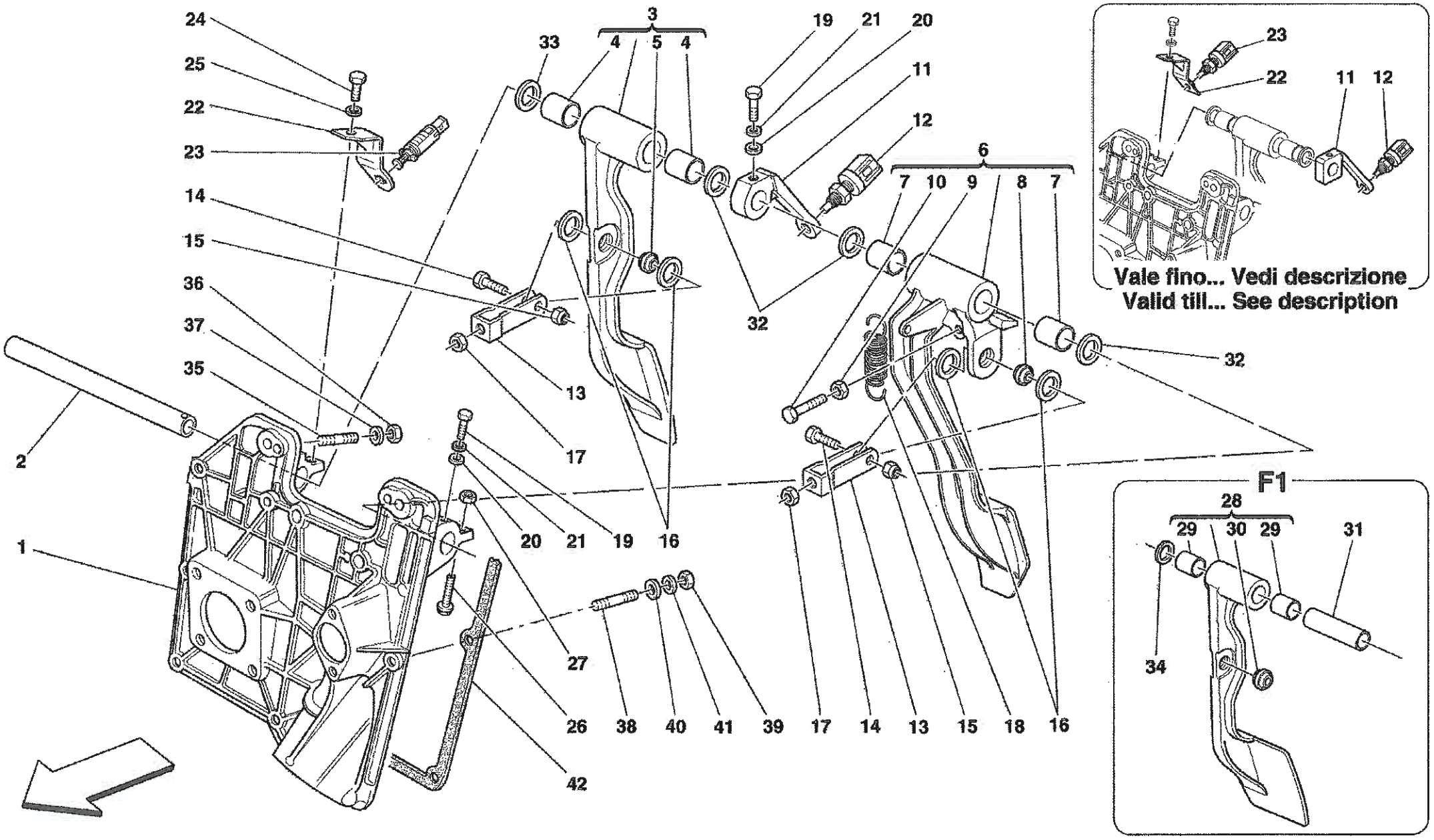
Vale fino... Vedi descrizione
Valid till... See description
F1

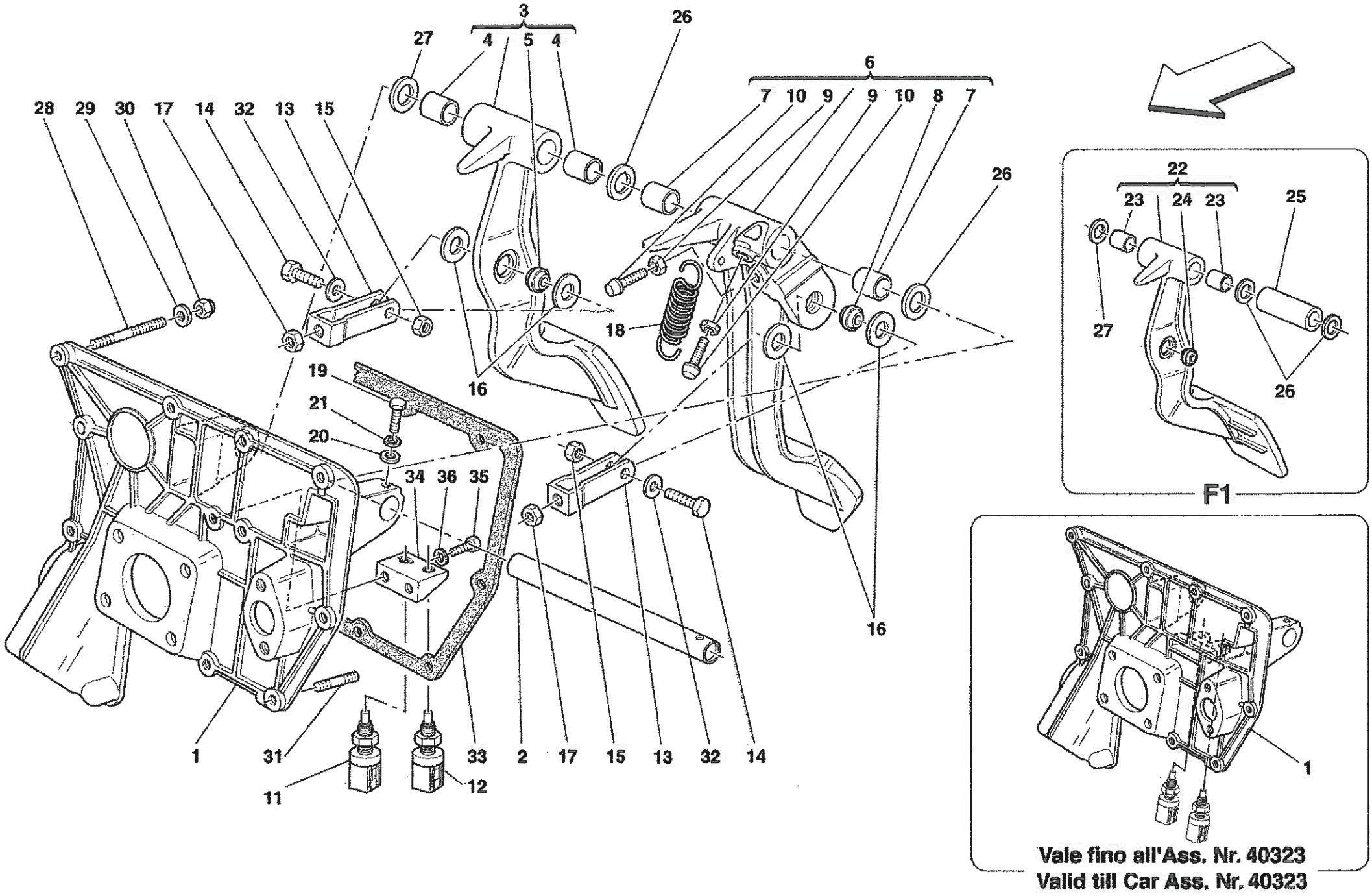
3
4
5
4
27
26
6
7
10
9
9
10
8
7
28
29
30
17
14
32
13
15
26
18
16
19
21
20
34
36
35
16
1
31
11
12
33
2
17
15
13
32
14
22
23
24
23
25
27
26
F1
1
Vale fino all'Ass. Nr. 40323
Valid till Car Ass. Nr. 40323

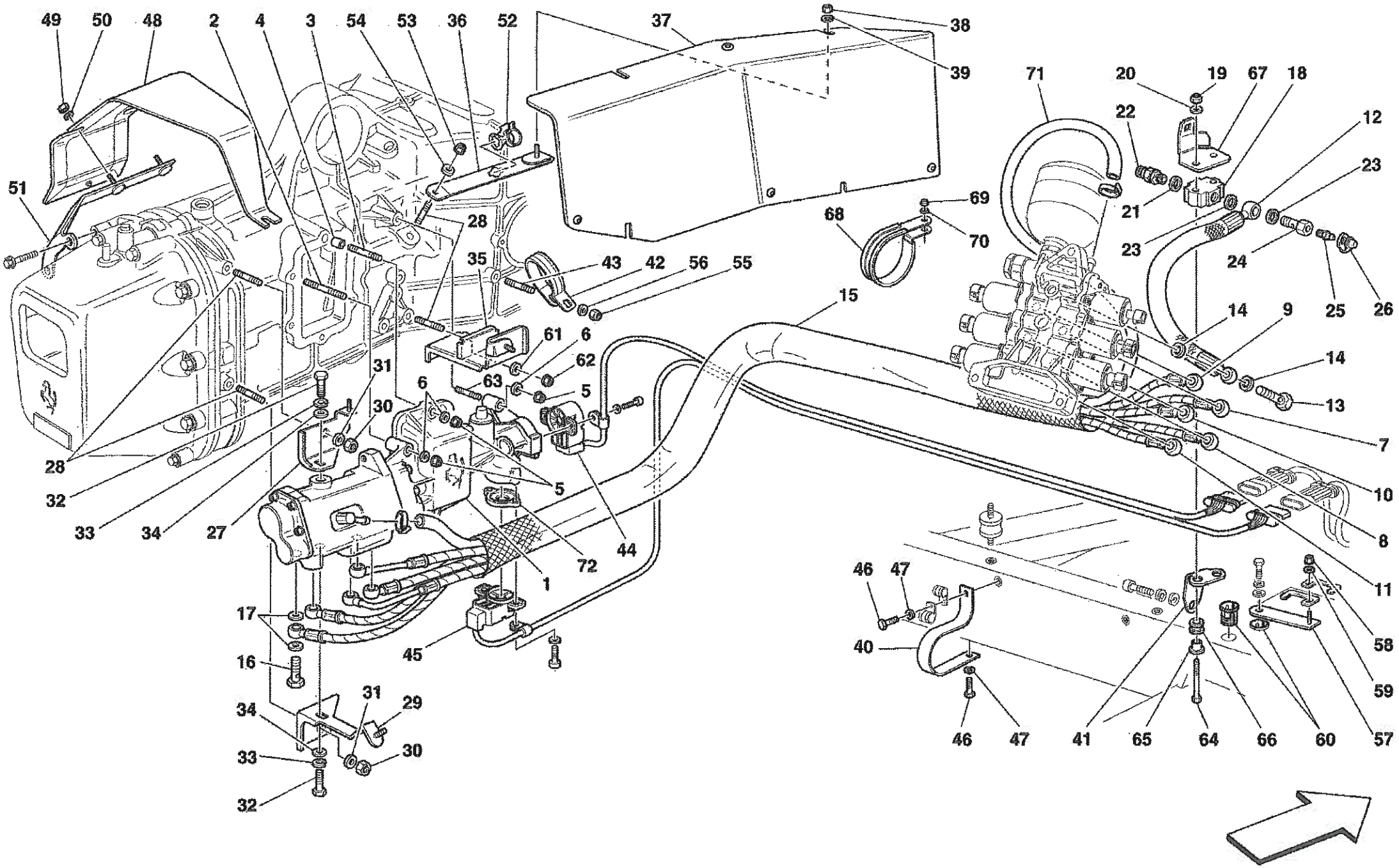
49
50
48
2
4
3
54
53
36
52
37
38
39
71
20
19
67
18
22
12
23
51
28
35
43
42
56
55
68
69
70
21
23
24
25
26
15
14
9
14
13
7
61
6
62
63
5
31
6
30
28
32
33
34
27
5
72
44
1
10
8
11
46
47
40
17
16
45
31
29
34
33
30
32
46
47
41
65
64
66
60
57
58
59

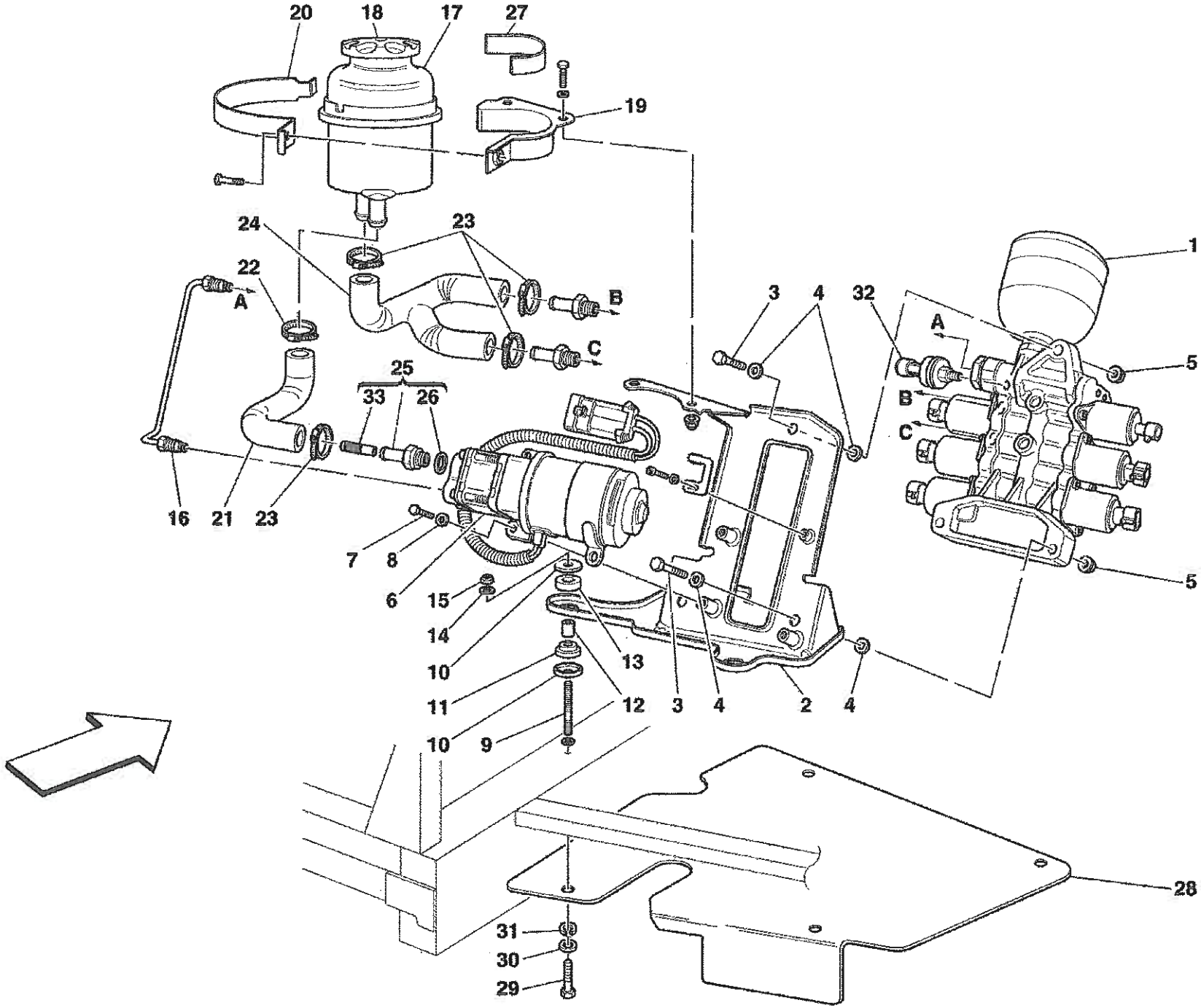
20
18
17
27
19
24
23
22
A
B
C
25
33
26
16
21
23
7
8
6
15
14
10
11
10
9
12
13
3
4
32
A
B
C
1
5
5
3
4
2
4
28
31
30
29

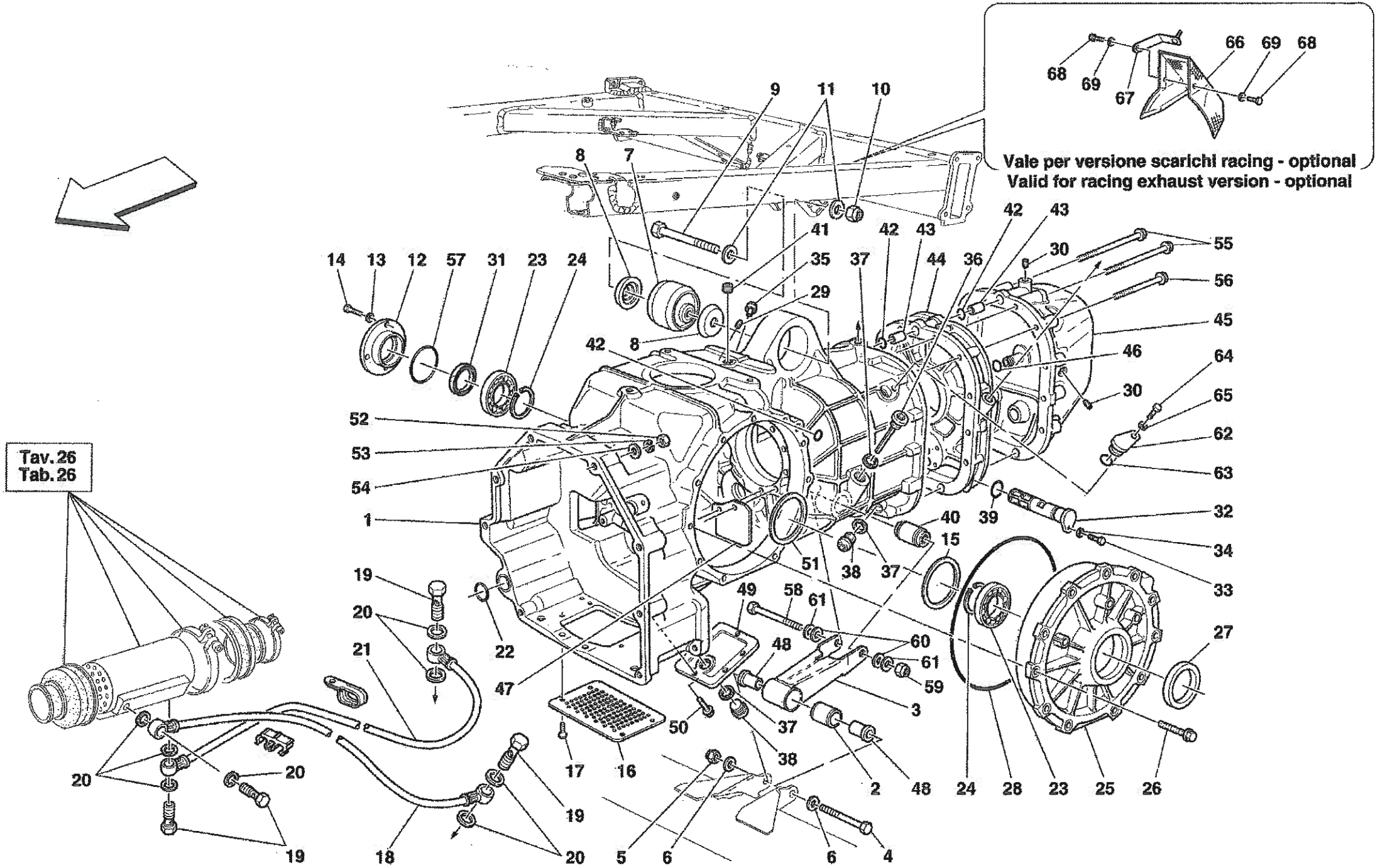
Vale per versione scarichi racing - optional
Valid for racing exhaust version - optional
Tav. 26
Tab. 26

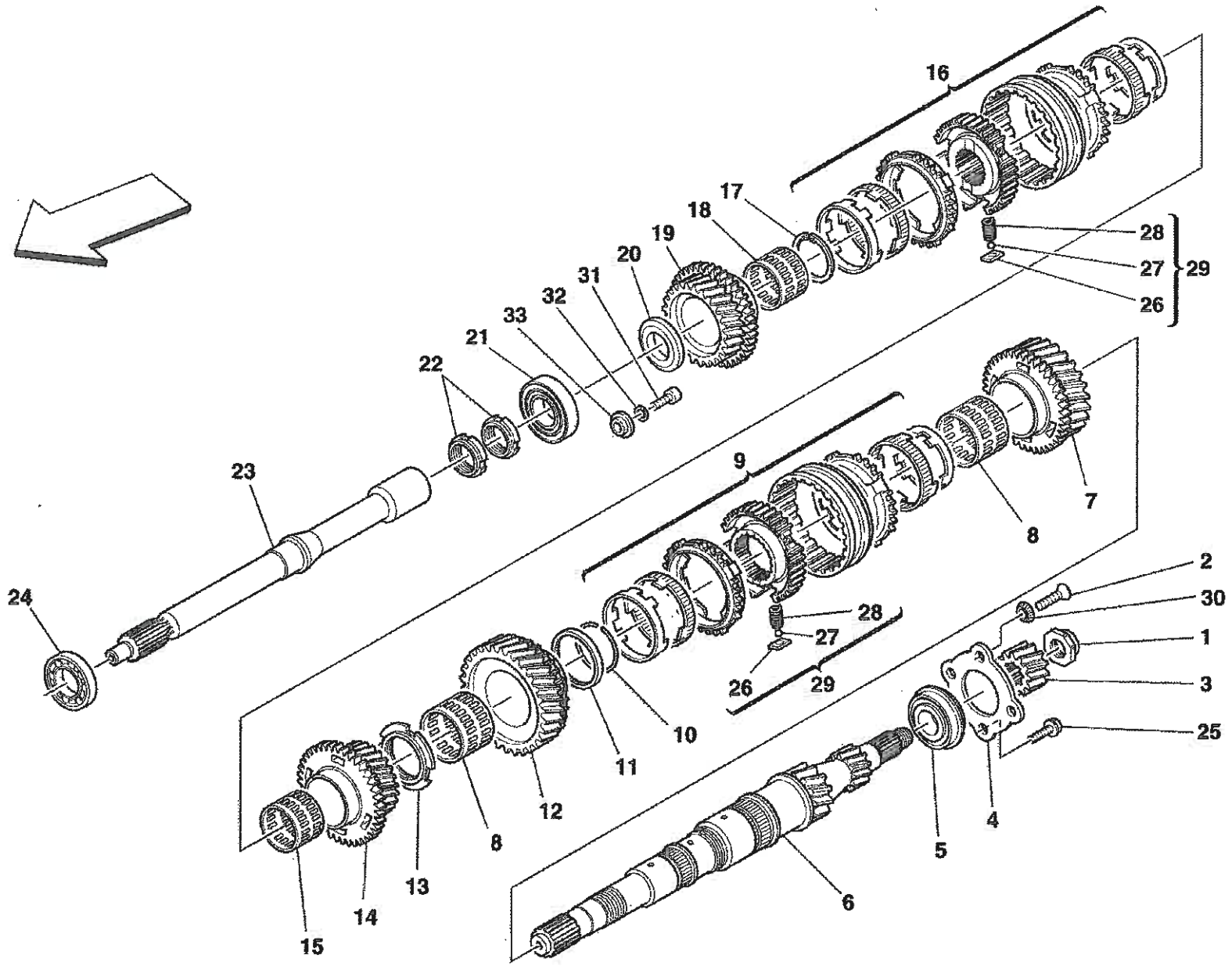
16
17
18
19
20
31
32
33
21
22
23
24
28
27
26
29
9
7
8
2
30
1
3
25
4
5
6
10
11
12
13
14
15

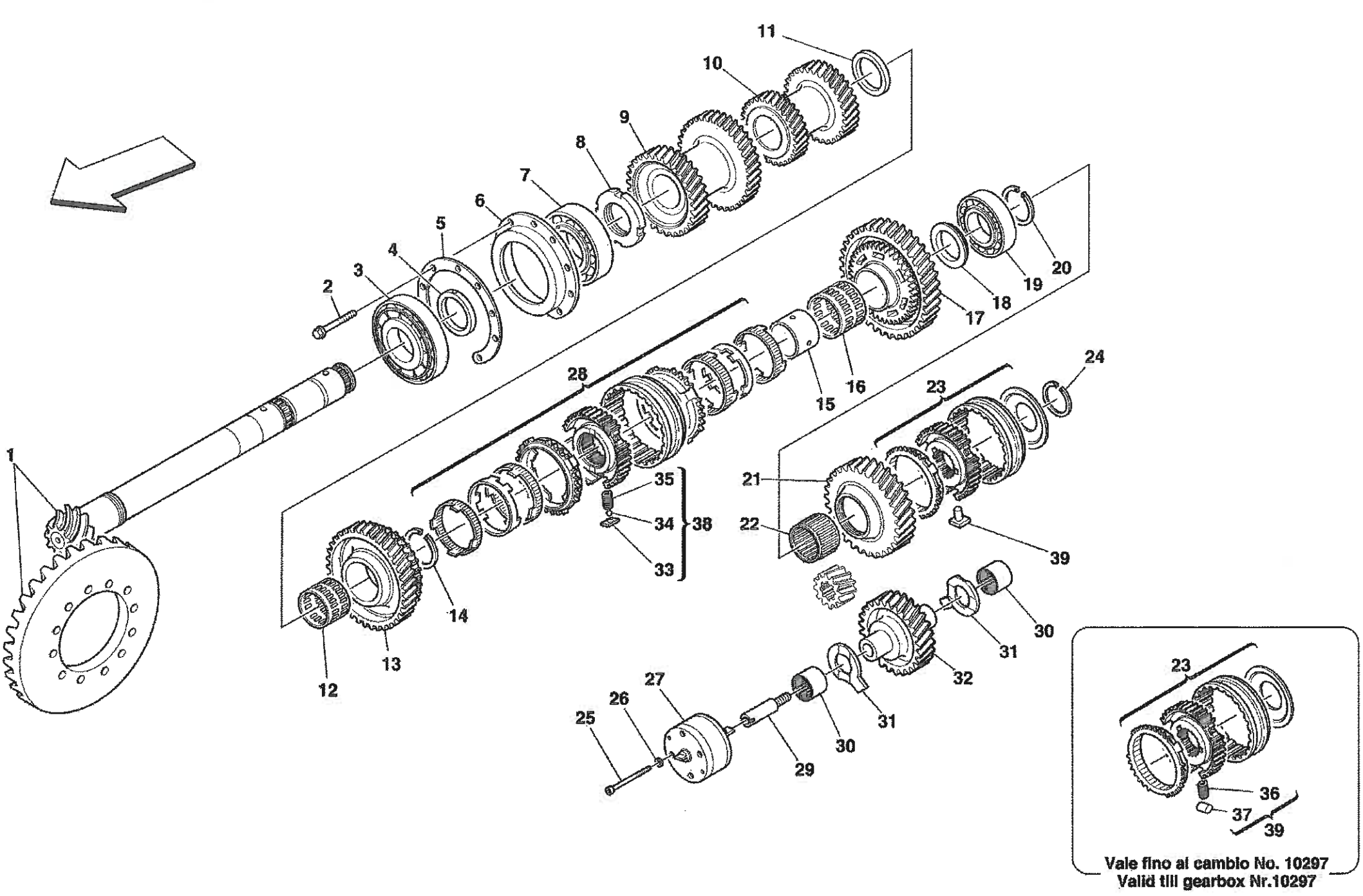
1
2
3
4
5
6
7
8
9
10
11
12
13
14
15
16
17
18
19
20
21
22
23
24
25
26
27
28
29
30
31
32
33
34
35
38
39
Vale fino al cambio No. 10297
Valid till gearbox Nr.10297

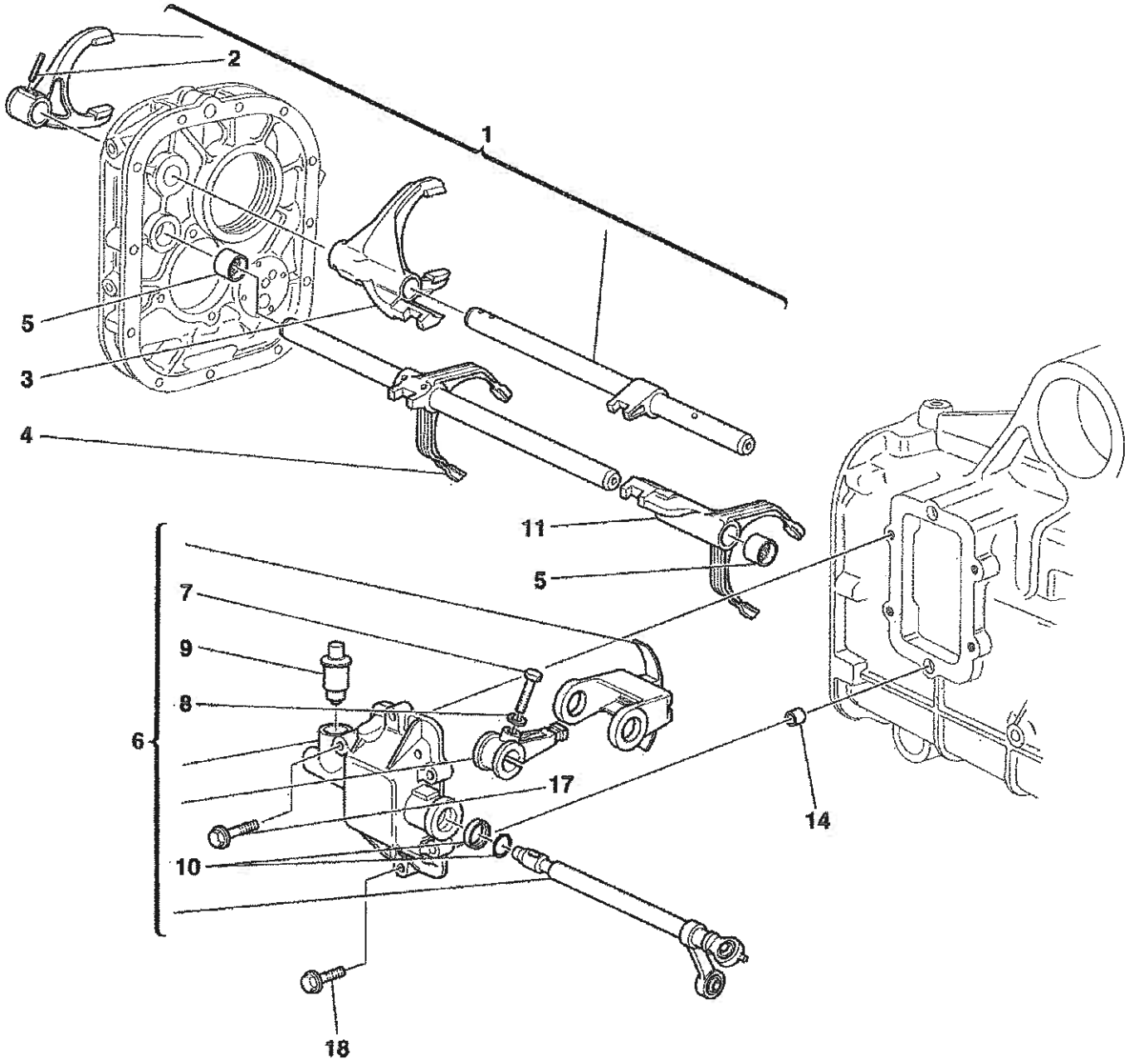

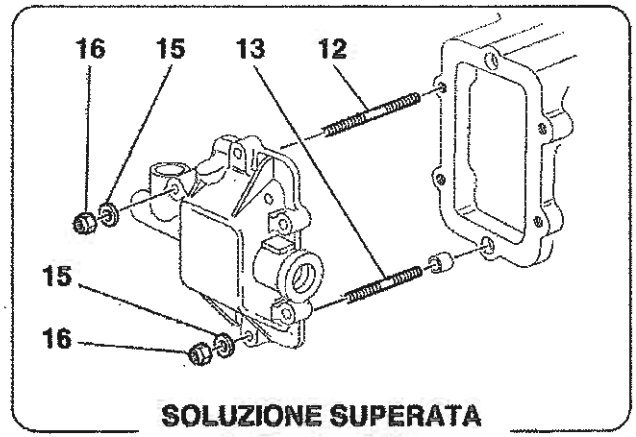

SOLUZIONE SUPERATA
OLD SOLUTION

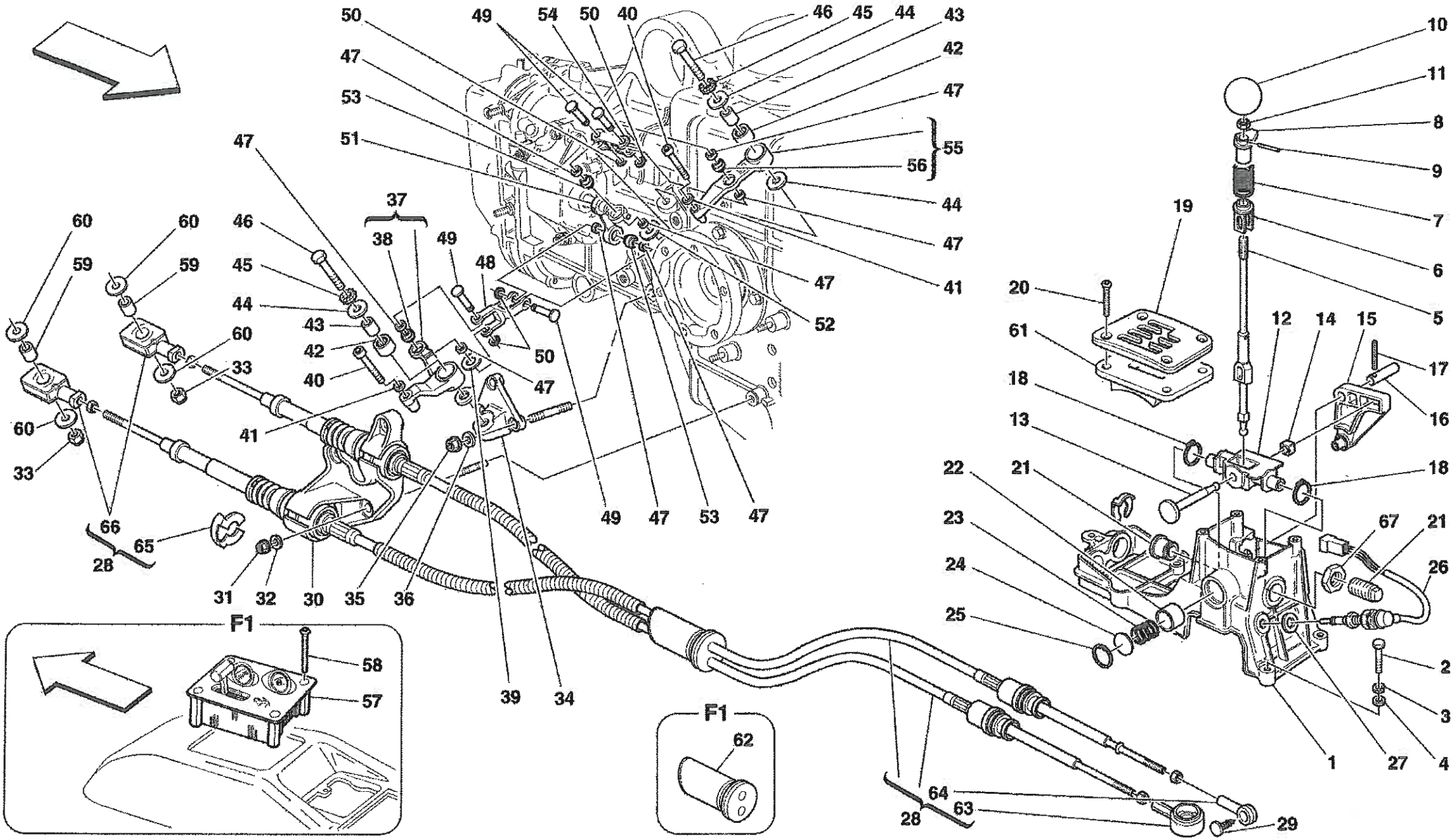
F1
F1

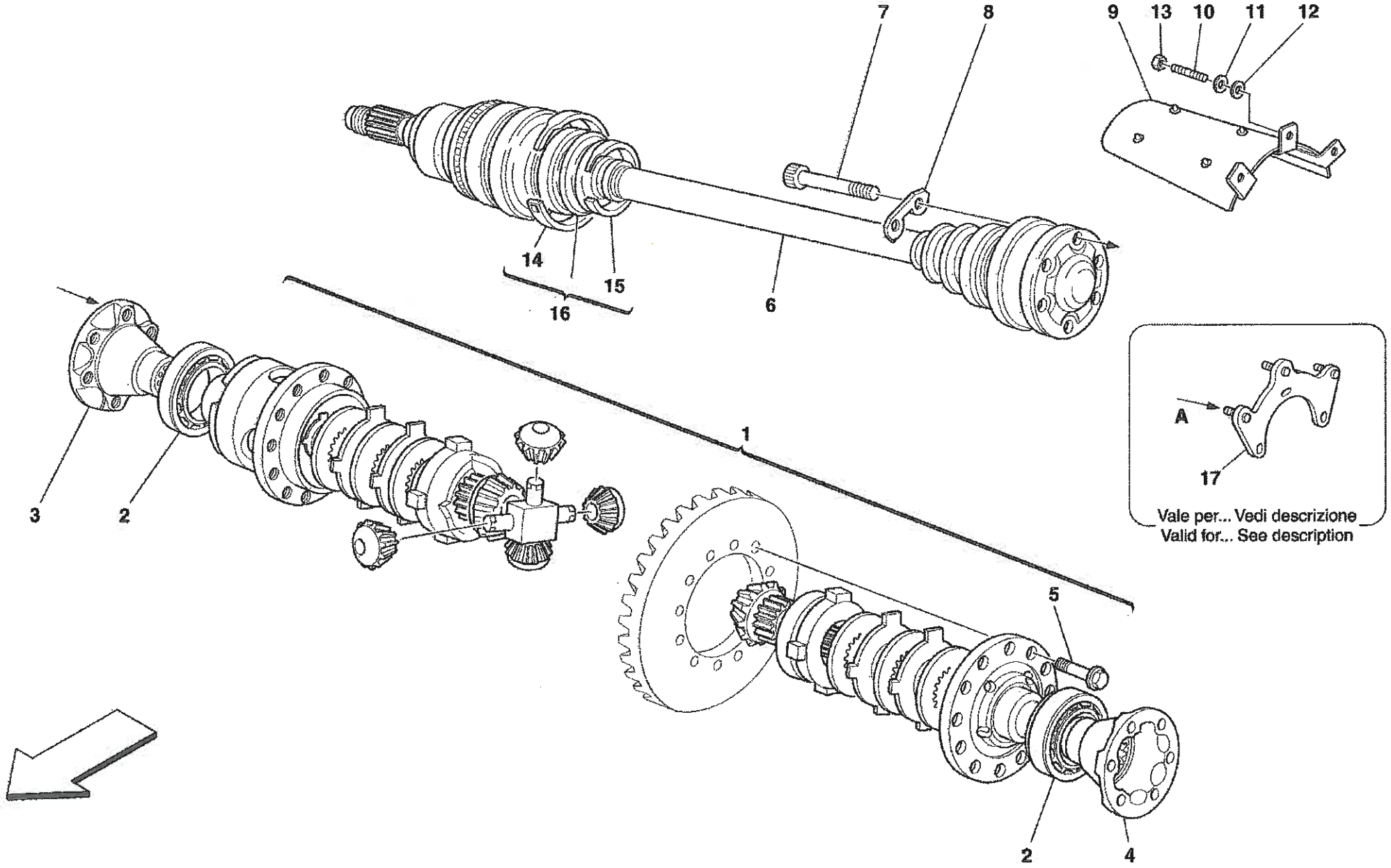
7
8
9
13
10
11
12
14
15
16
6
1
3
2
A
17
Vale per... Vedi descrizione
Valid for... See description
5
2
4

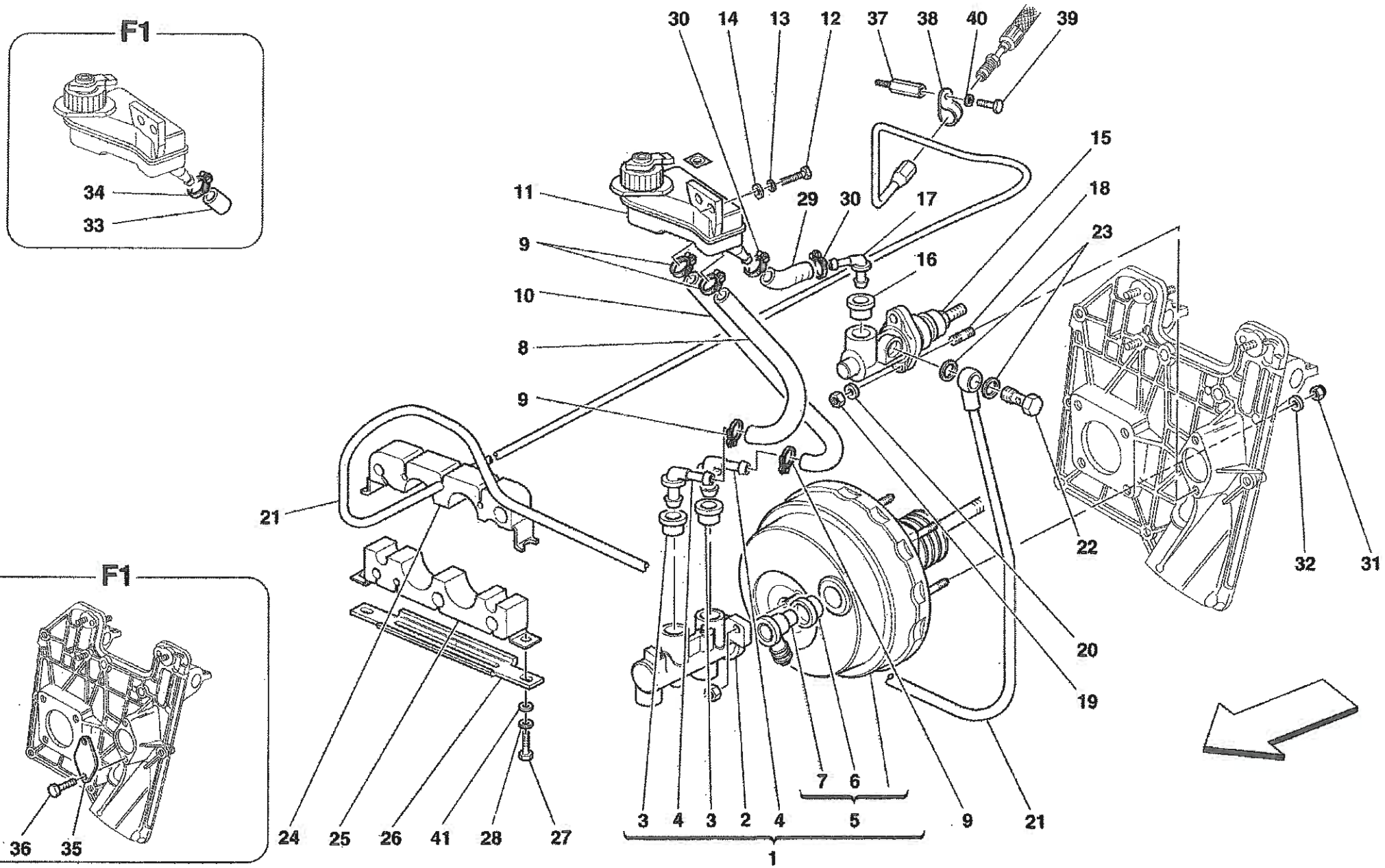
F1
34
33
F1
36
35
30
14
13
12
37
38
40
39
15
18
23
11
29
30
17
9
16
10
8
9
21
22
32
31
20
19
7
6
3
4
3
2
4
5
9
21
1
24
25
26
41
28
27

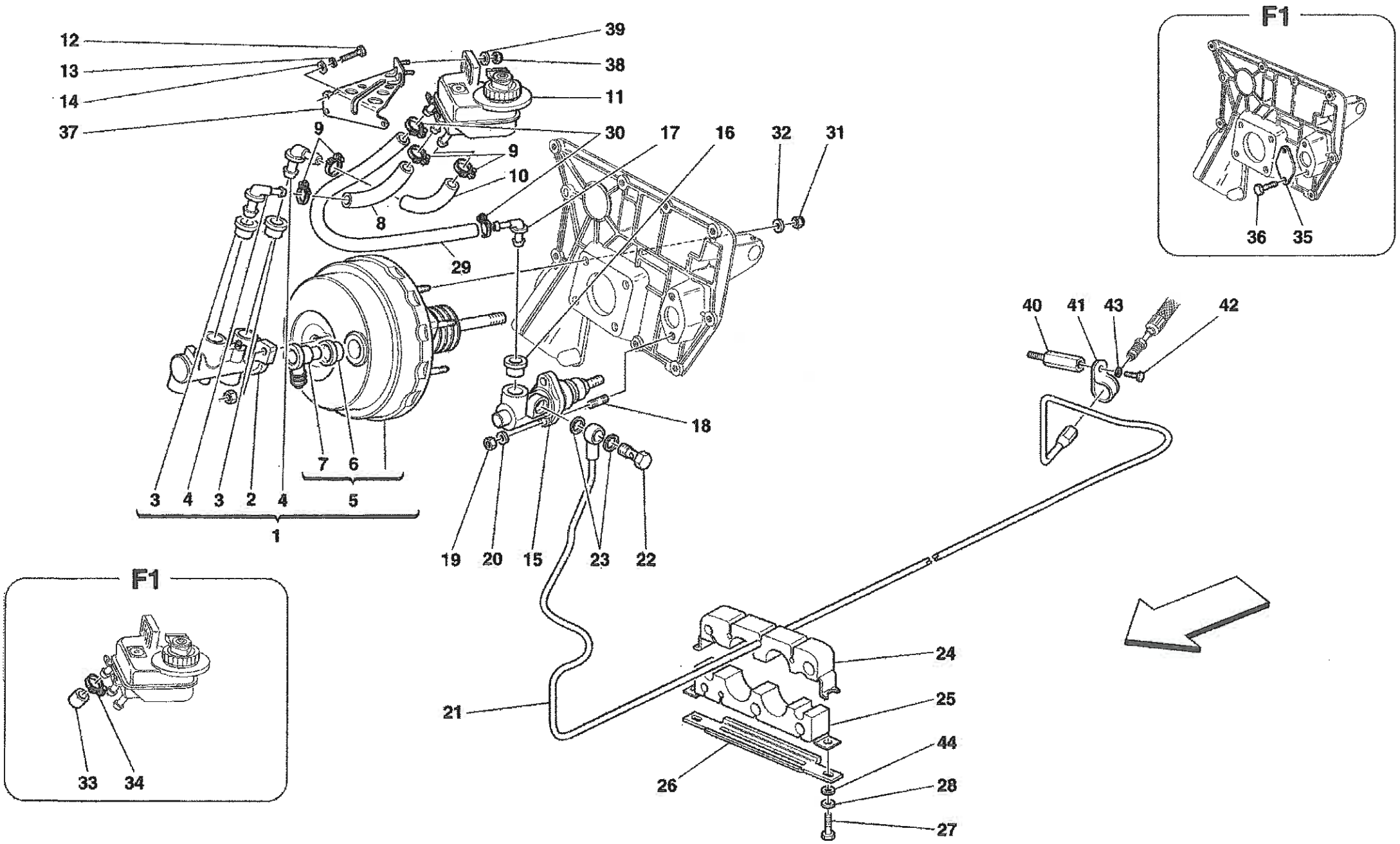
F1
F1
12
13
14
37
39
38
11
30
17
16
32
31
9
9
10
8
29
18
7
6
3
4
3
2
4
5
1
19
20
15
23
22
40
41
43
42
36
35
33
34
21
24
25
44
26
28
27

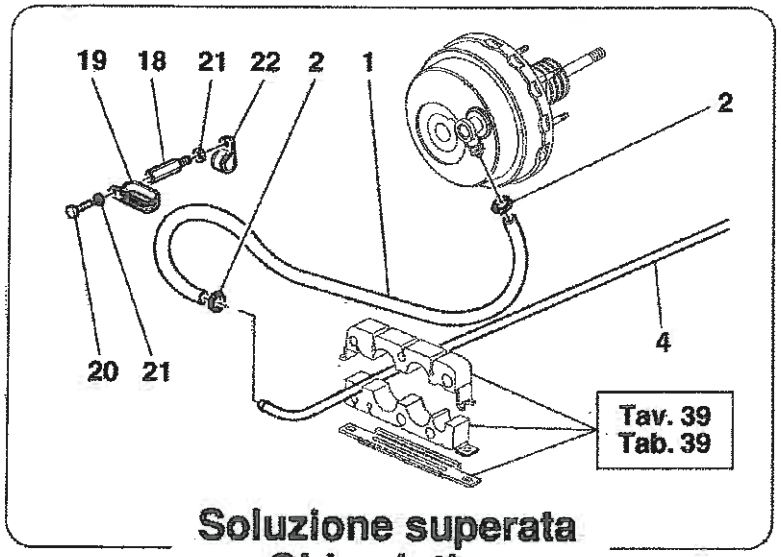

Soluzione superata
Old solution

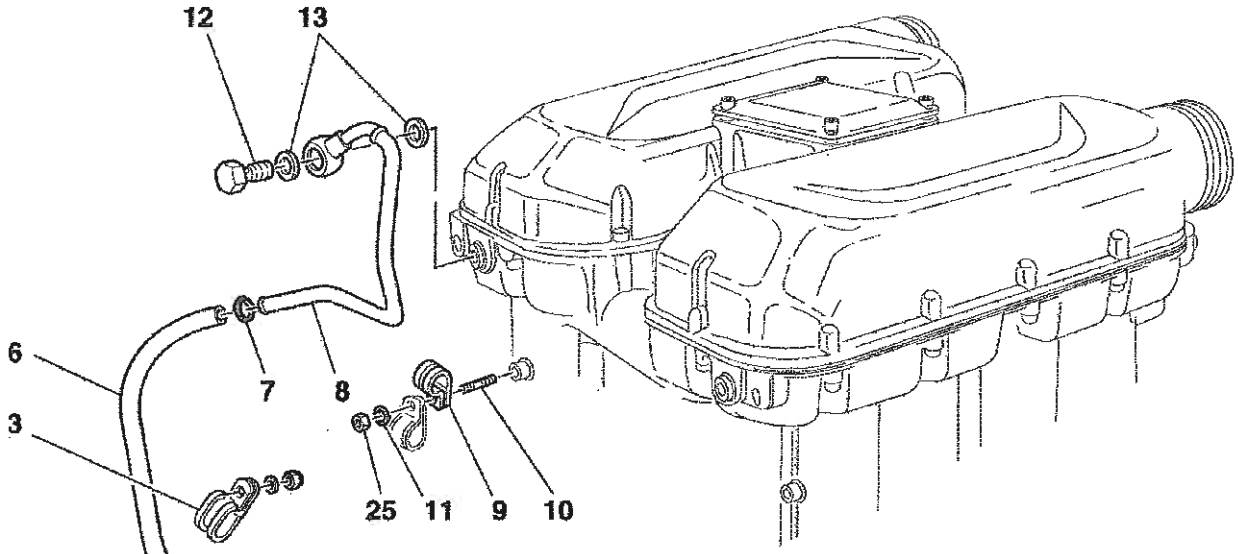

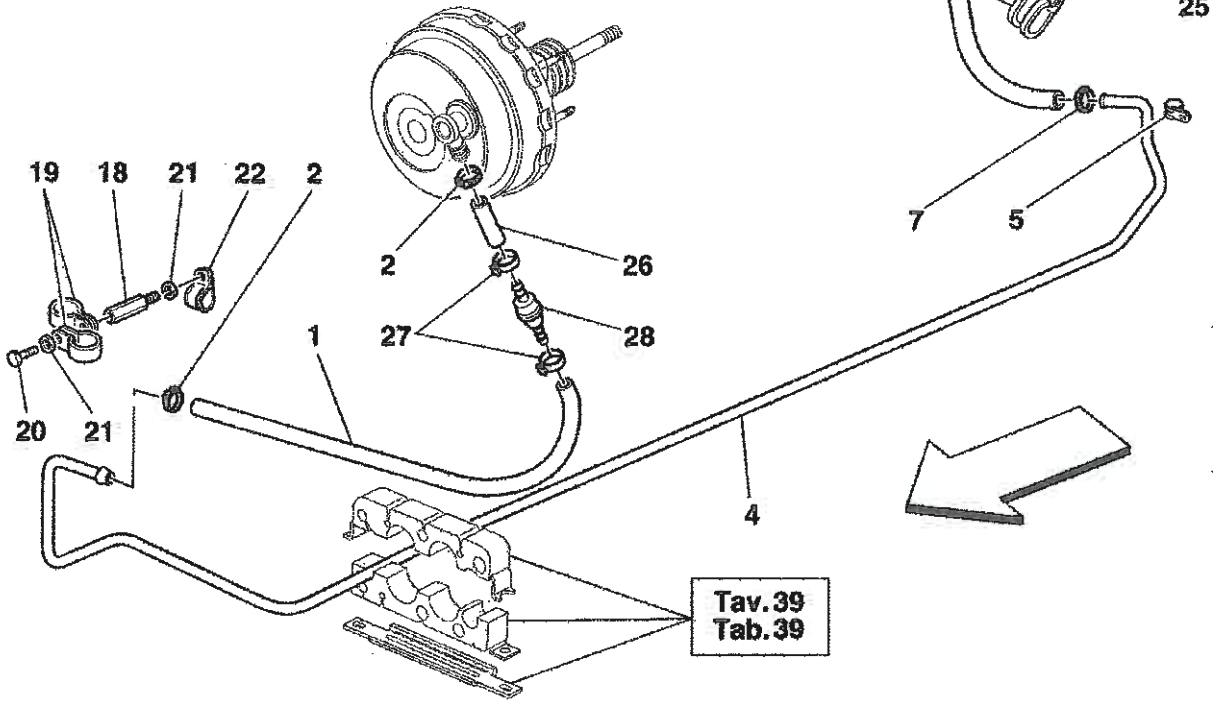

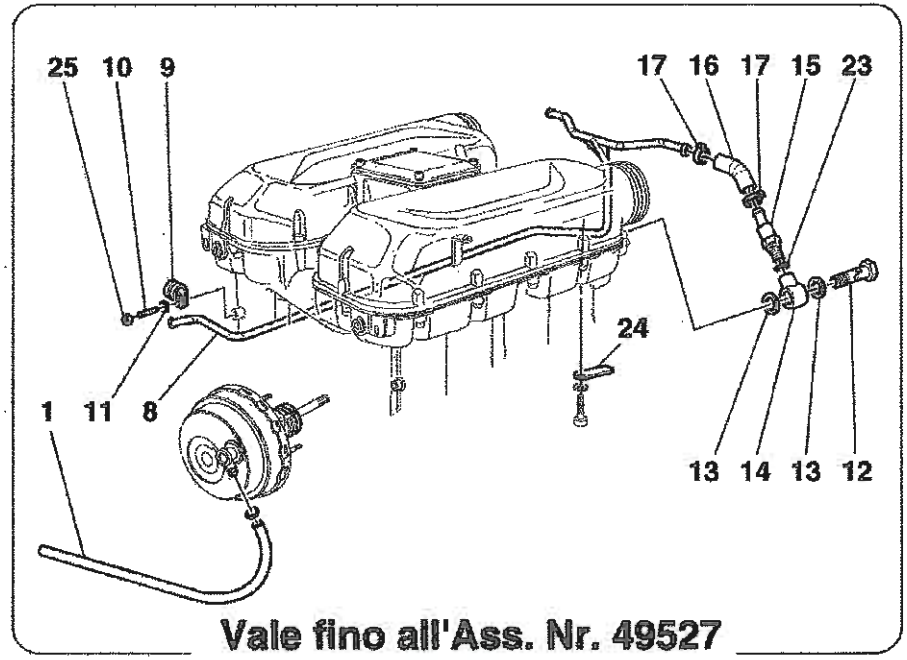

Vale fino all'Ass. Nr. 49527
Valid till Ass. Nr. 49527

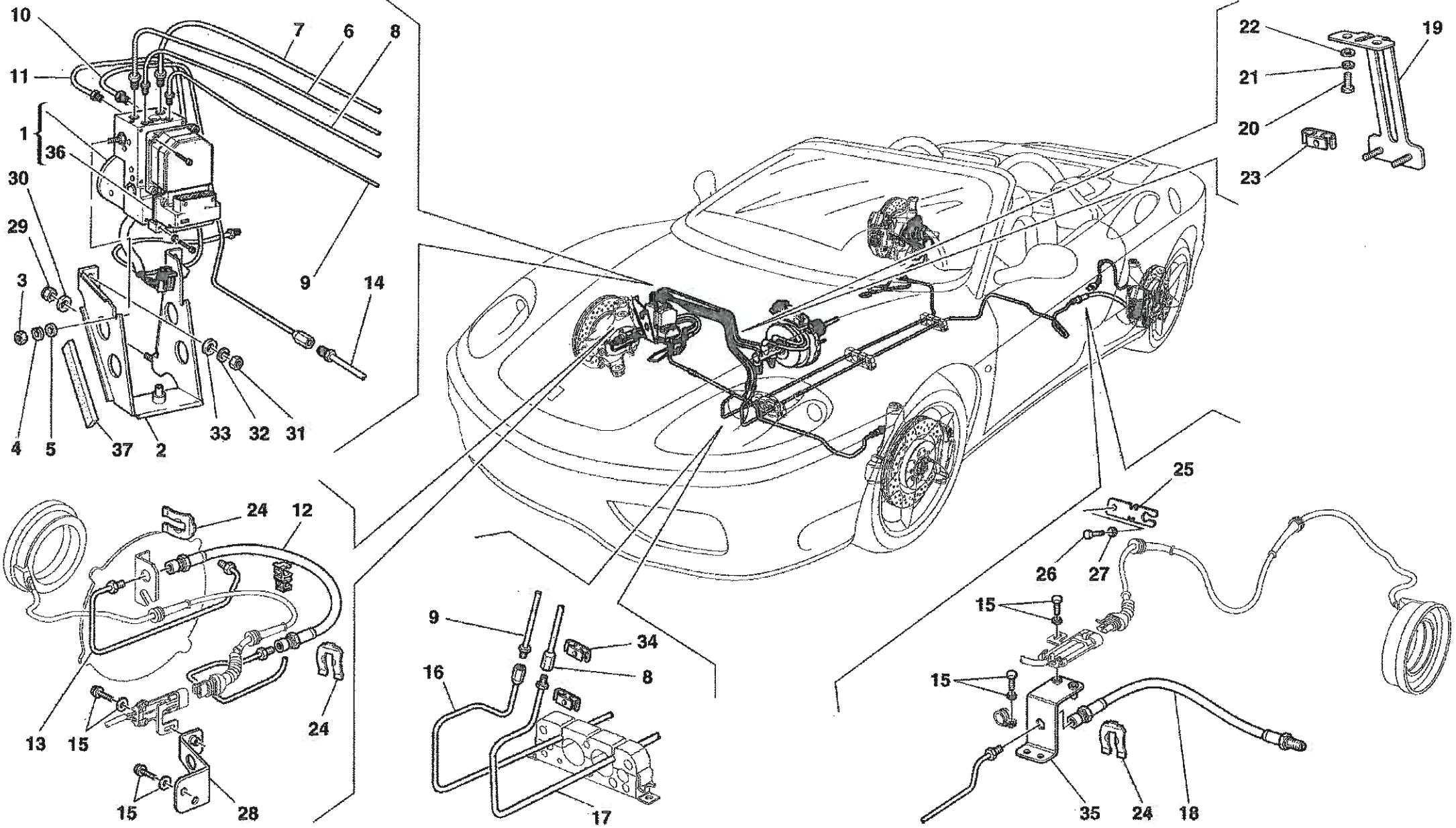
10
11
1
36
30
29
3
4
5
37
2
33
32
31
7
6
8
9
14
22
21
20
23
19
24
12
13
15
24
15
28
9
34
8
16
17
25
26
27
15
15
35
24
18

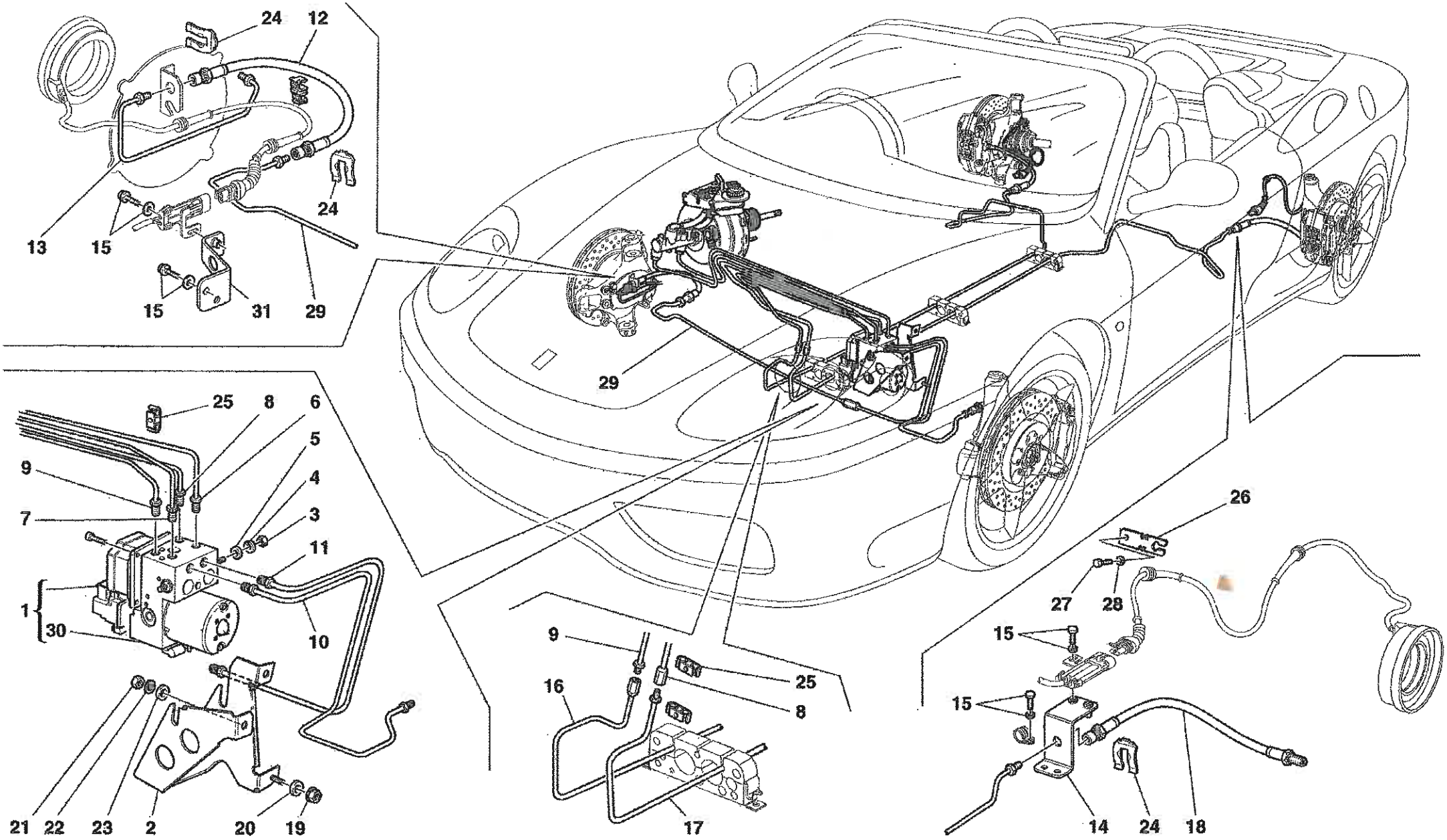
24
12
13
15
24
15
31
29
29
25
8
6
5
9
4
7
3
11
1
30
10
21
22
23
2
20
19
9
16
25
8
17
26
27
28
15
15
14
24
18

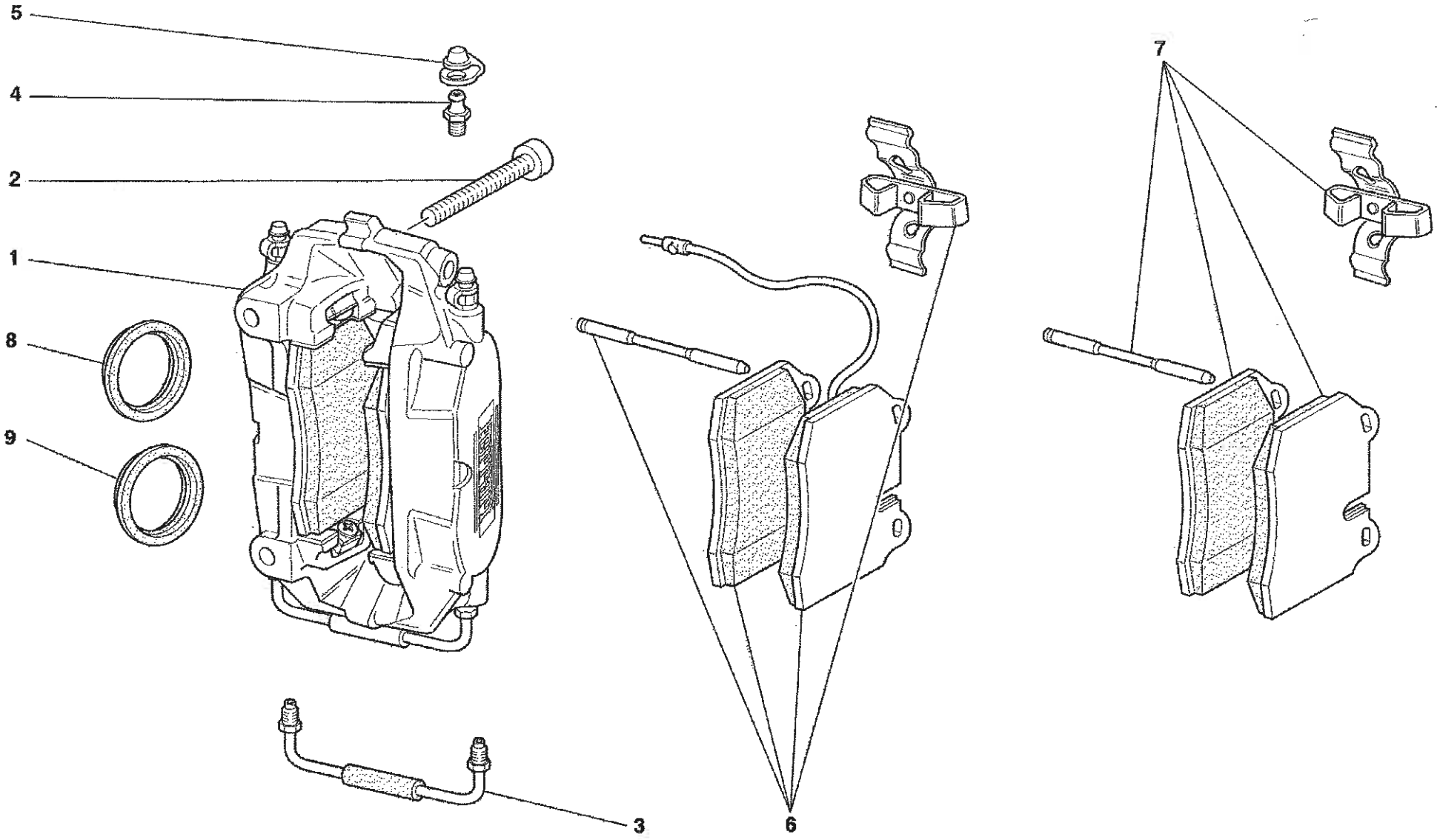
5
4
2
1
8
9
3
6
7

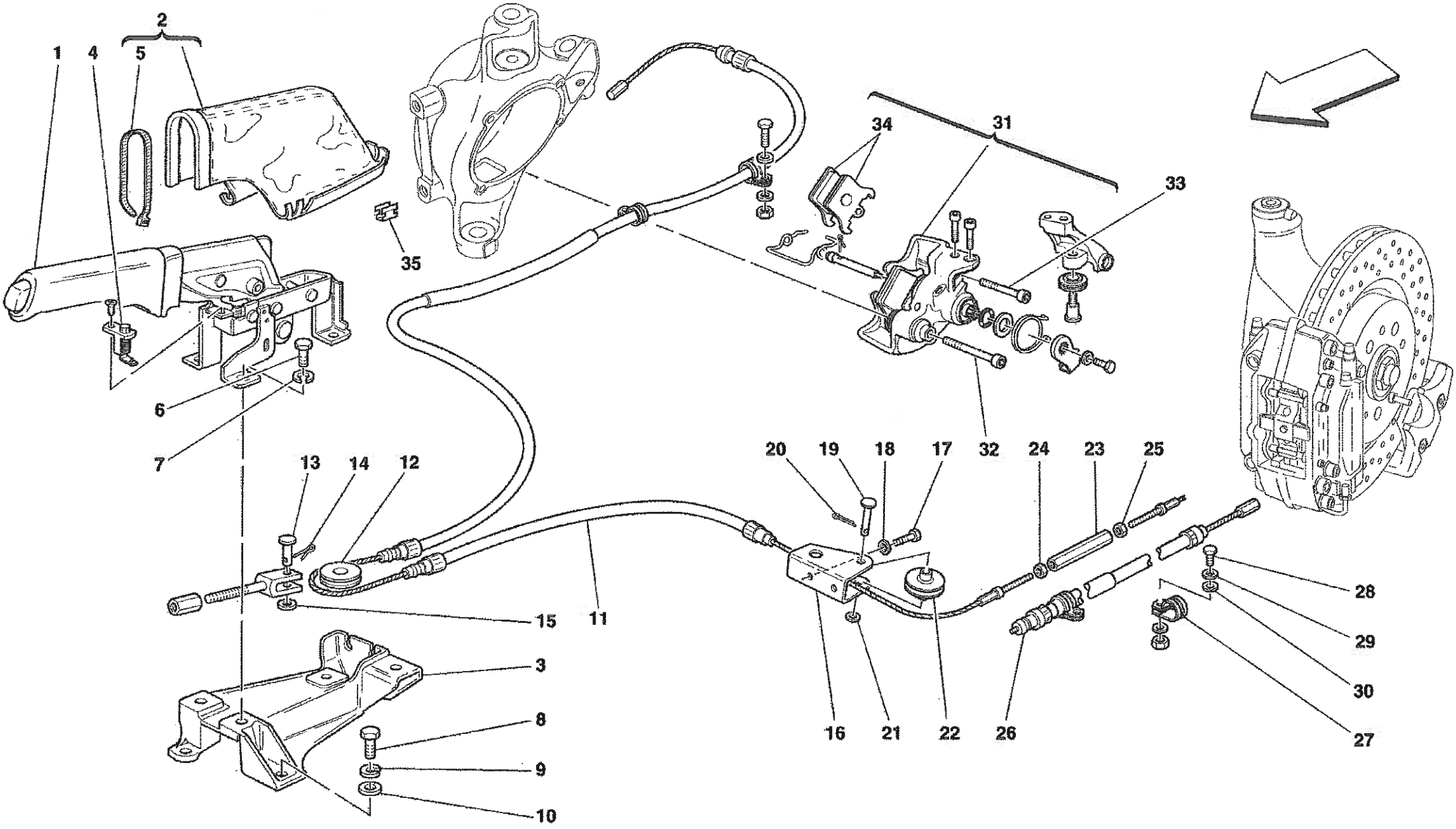
1
2
4
5
6
7
35
34
31
33
32
20
19
18
17
24
23
25
13
14
12
15
11
28
29
30
27
16
21
22
26
3
8
9
10

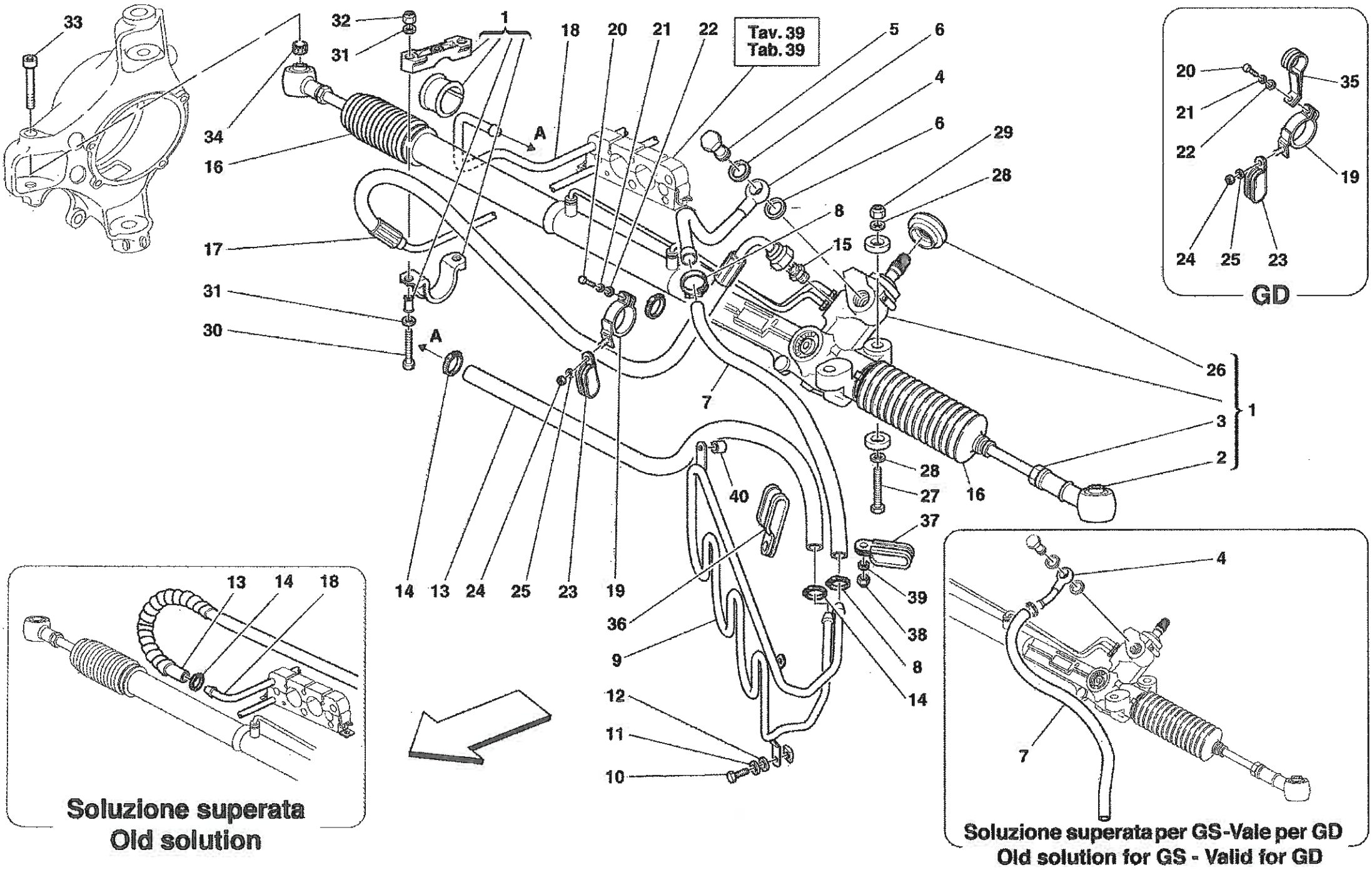
Tav. 39
Tab. 39
GD
Soluzione superata
Old solution
Soluzione superata per GS-Vale per GD
Old solution for GS - Valid for GD

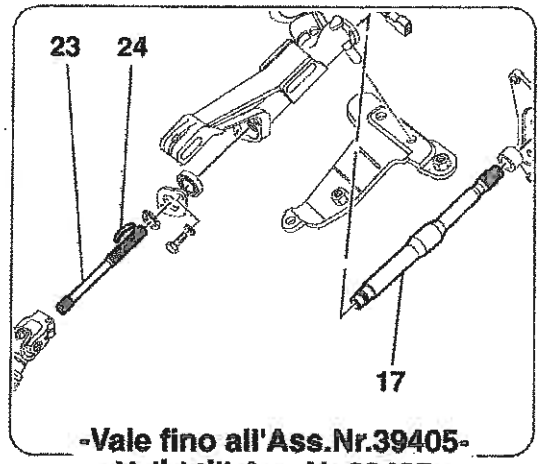
23
24
17
-Vale fino all'Ass.Nr.39405-
-Valid till Ass.Nr.39405-

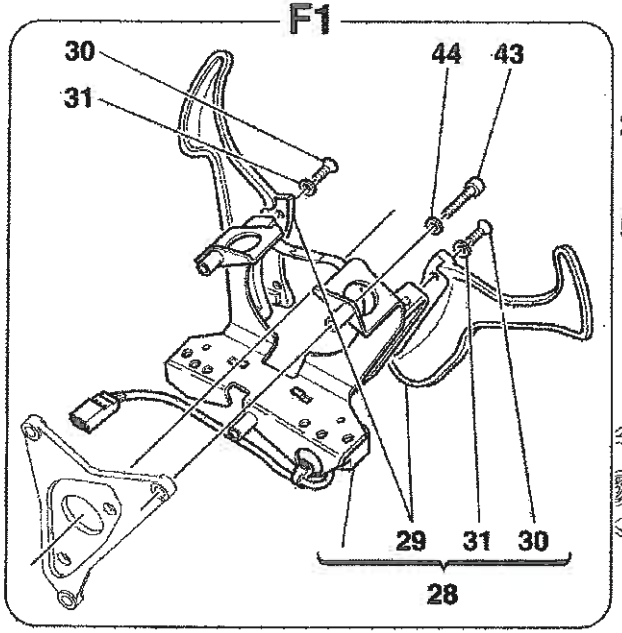
F1
30
31
44
43
29
31
30
28

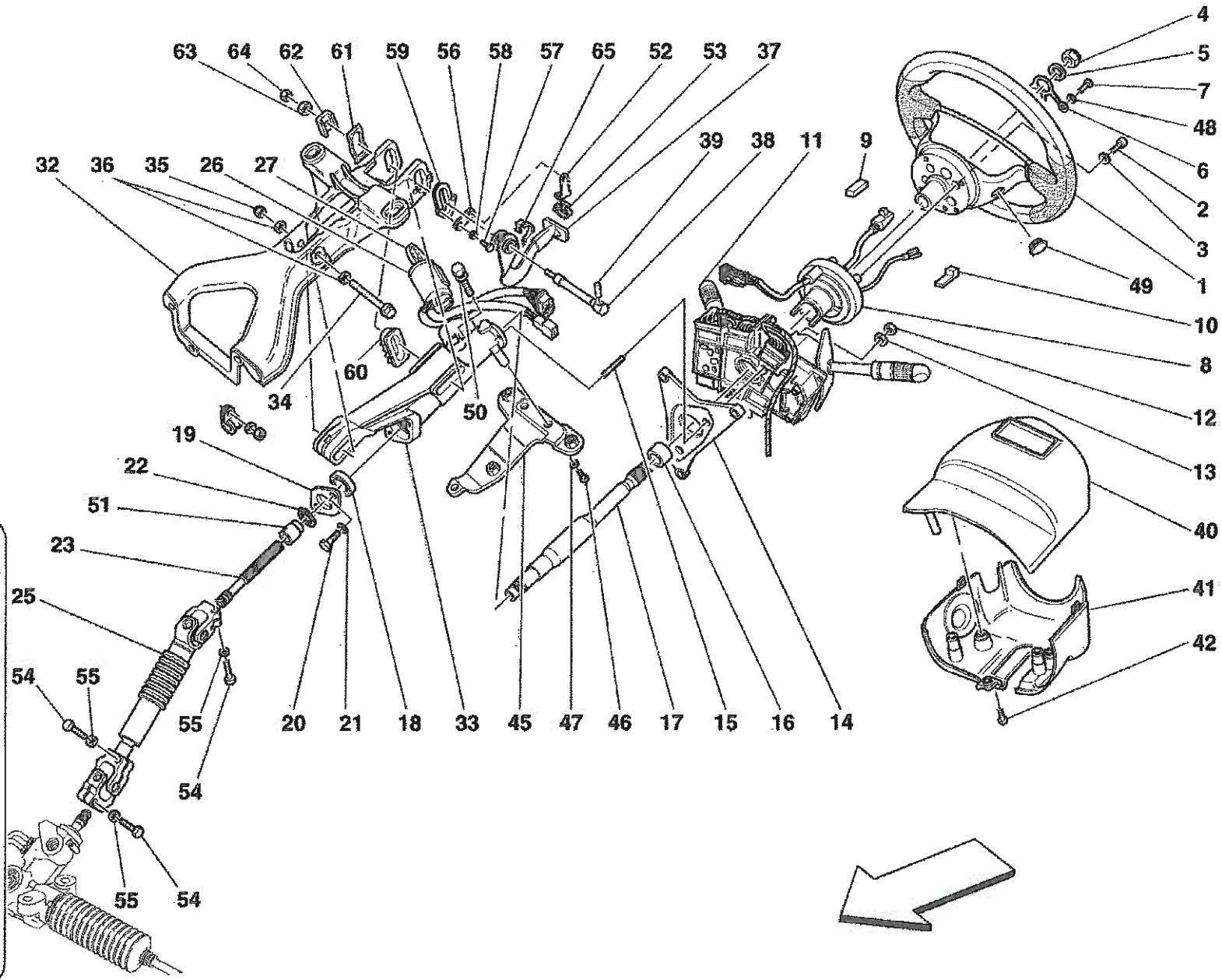
63
64
62
61
59
56
58
57
65
52
53
37
4
5
7
48
6
2
3
1
49
10
8
12
13
40
41
42
32
36
35
26
27
39
38
11
9
34
60
50
19
22
51
23
25
54
55
20
21
18
33
45
47
46
17
15
16
14

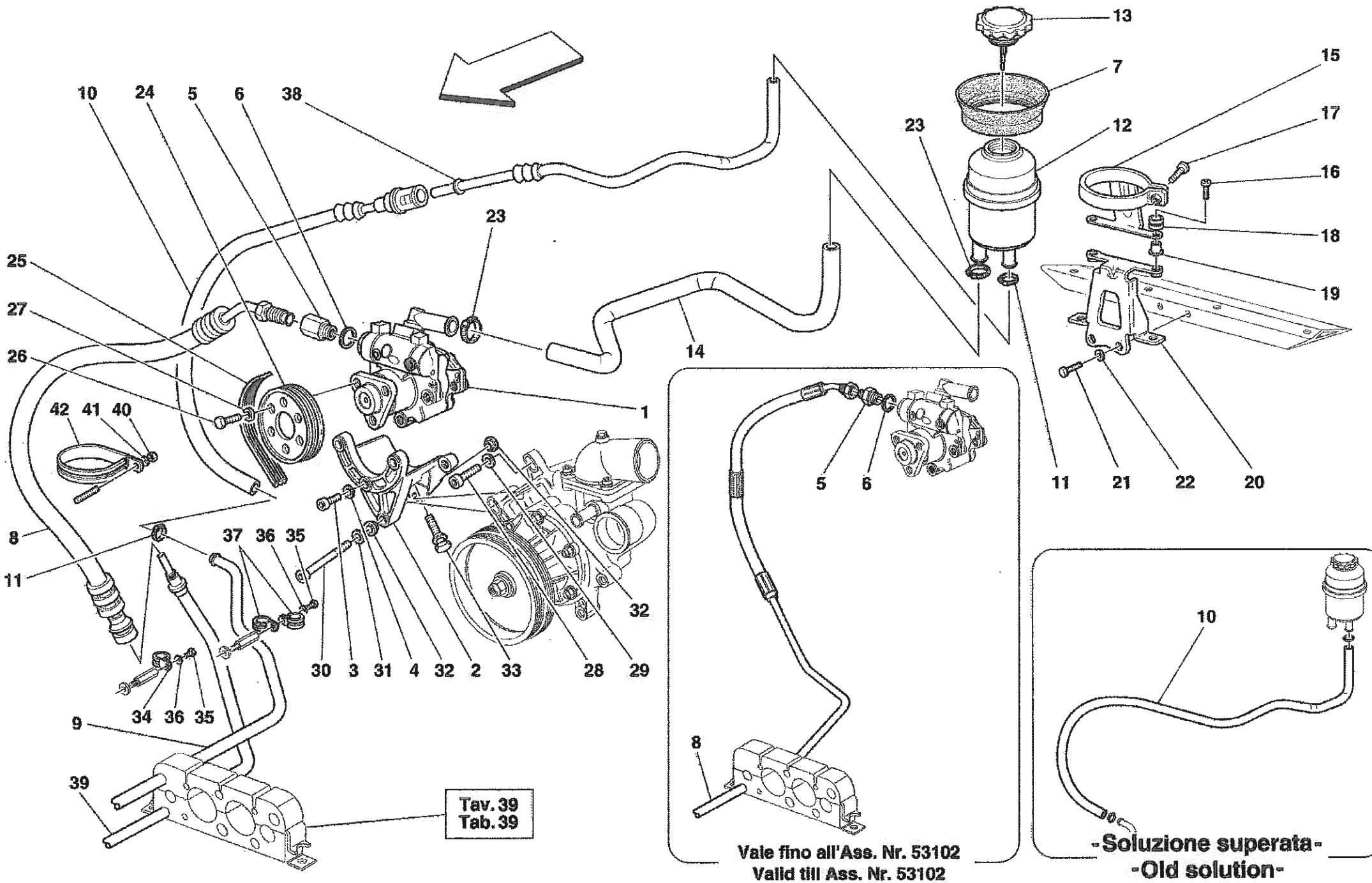
10
24
5
6
38
23
25
27
26
42
41
40
1
14
13
7
15
17
12
16
18
19
11
21
22
20
8
37
36
35
30
3
31
4
32
2
33
28
29
34
36
35
9
39
Tav. 39
Tab. 39
5
6
8
Vale fino all'Ass. Nr. 53102
Valid till Ass. Nr. 53102
10
-Soluzione superata-
-Old solution-

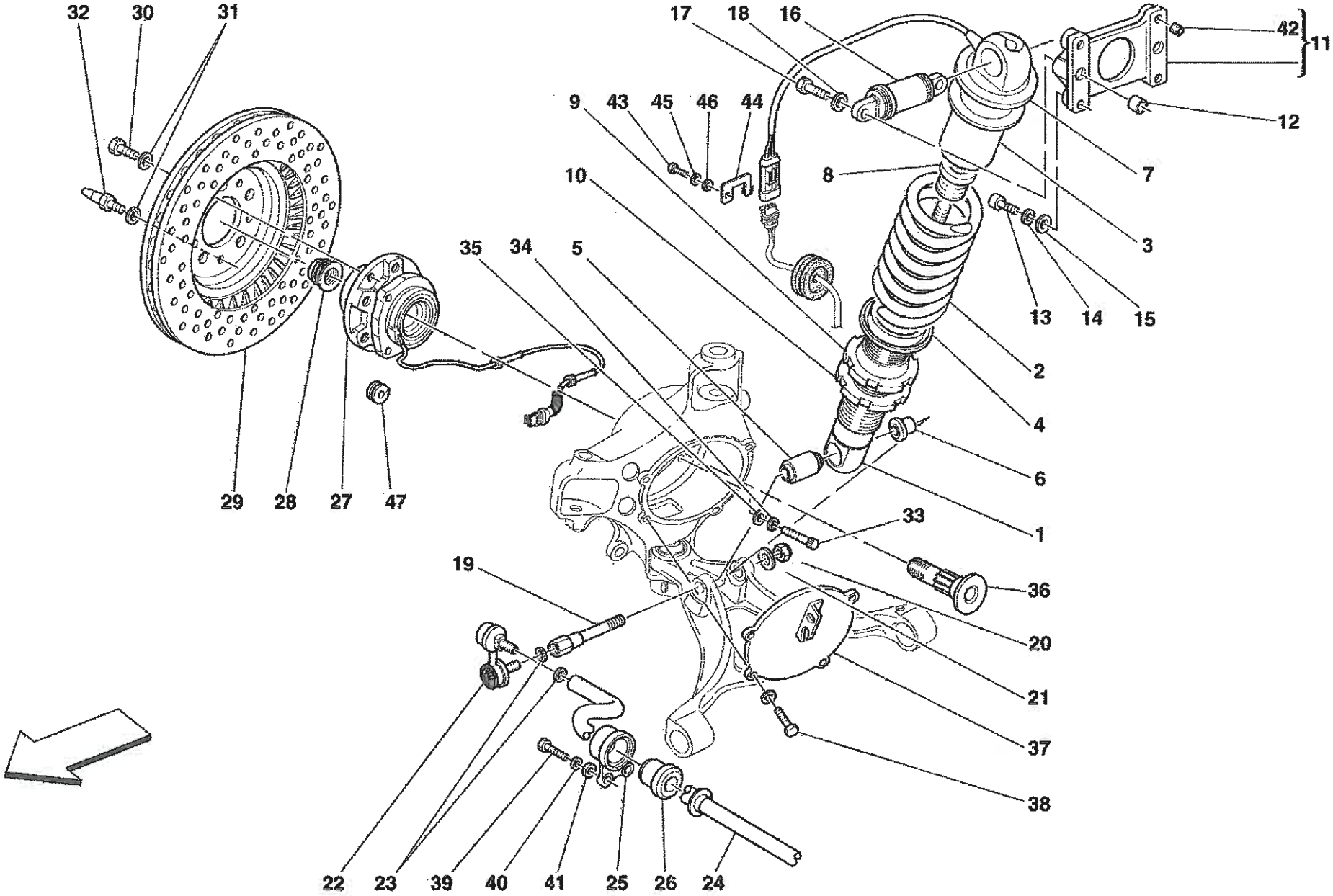
32
30
31
17
18
16
42
11
12
9
43
45
46
44
8
7
10
3
35
34
5
13
14
15
2
4
6
29
28
27
47
33
1
19
36
20
21
37
38
22
23
39
40
41
25
26
24

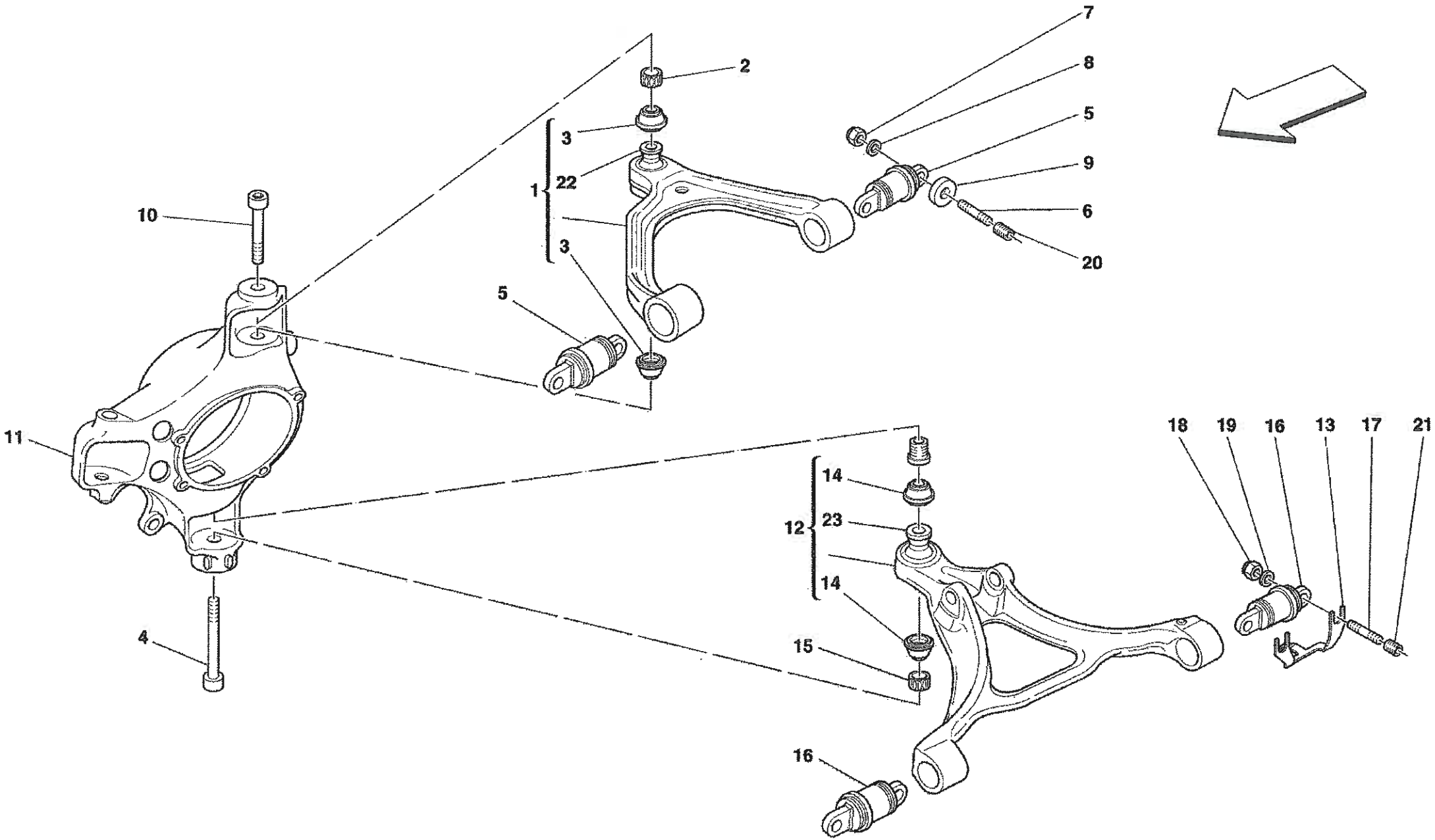
1
2
3
3
4
5
5
6
7
8
9
10
11
12
13
14
14
15
16
16
17
18
19
20
21
22
23

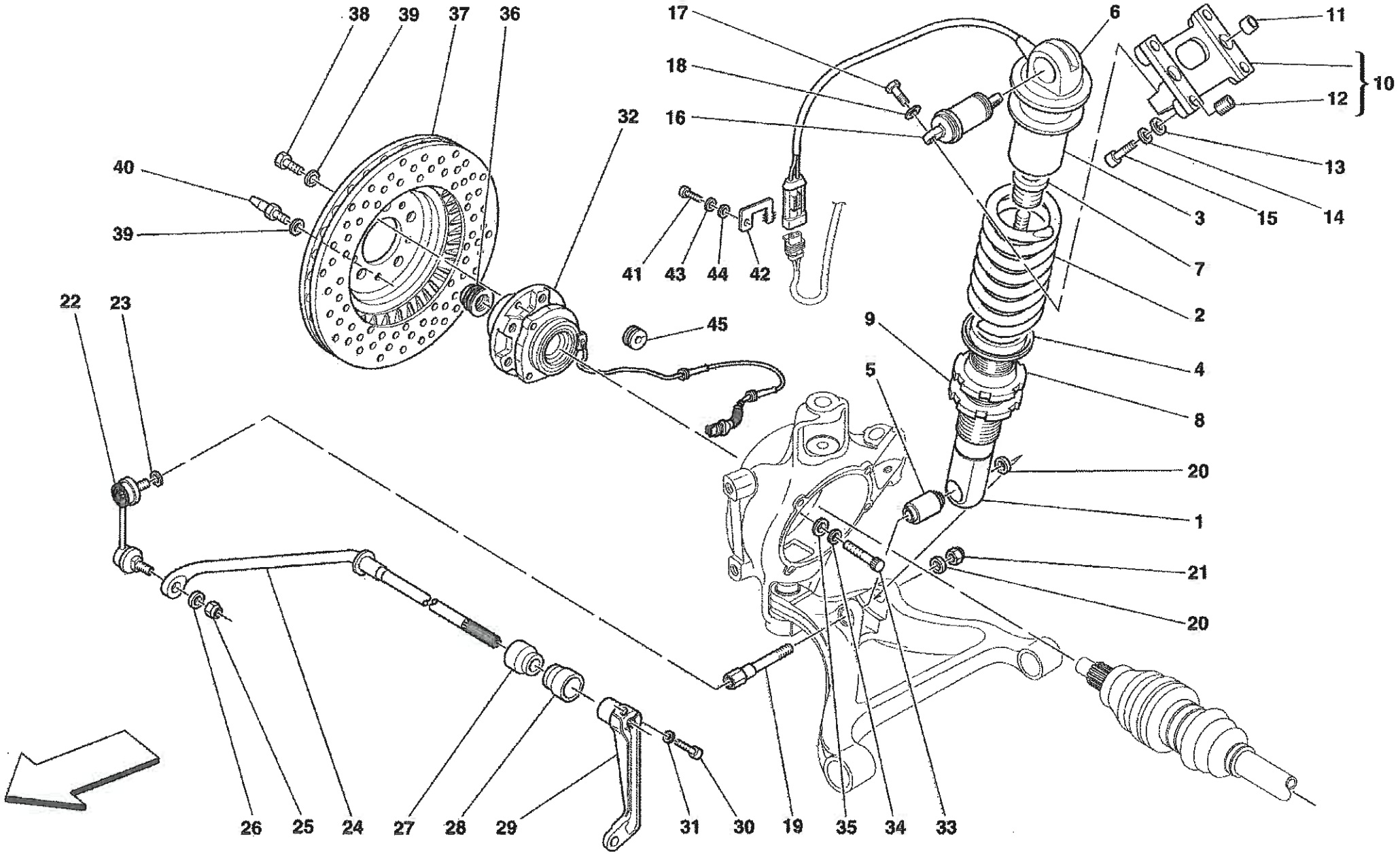
38
39
37
36
17
18
16
32
6
11
10
12
13
14
15
3
7
2
40
39
41
43
44
42
45
9
4
8
5
22
23
20
1
21
20
26
25
24
27
28
29
31
30
19
35
34
33

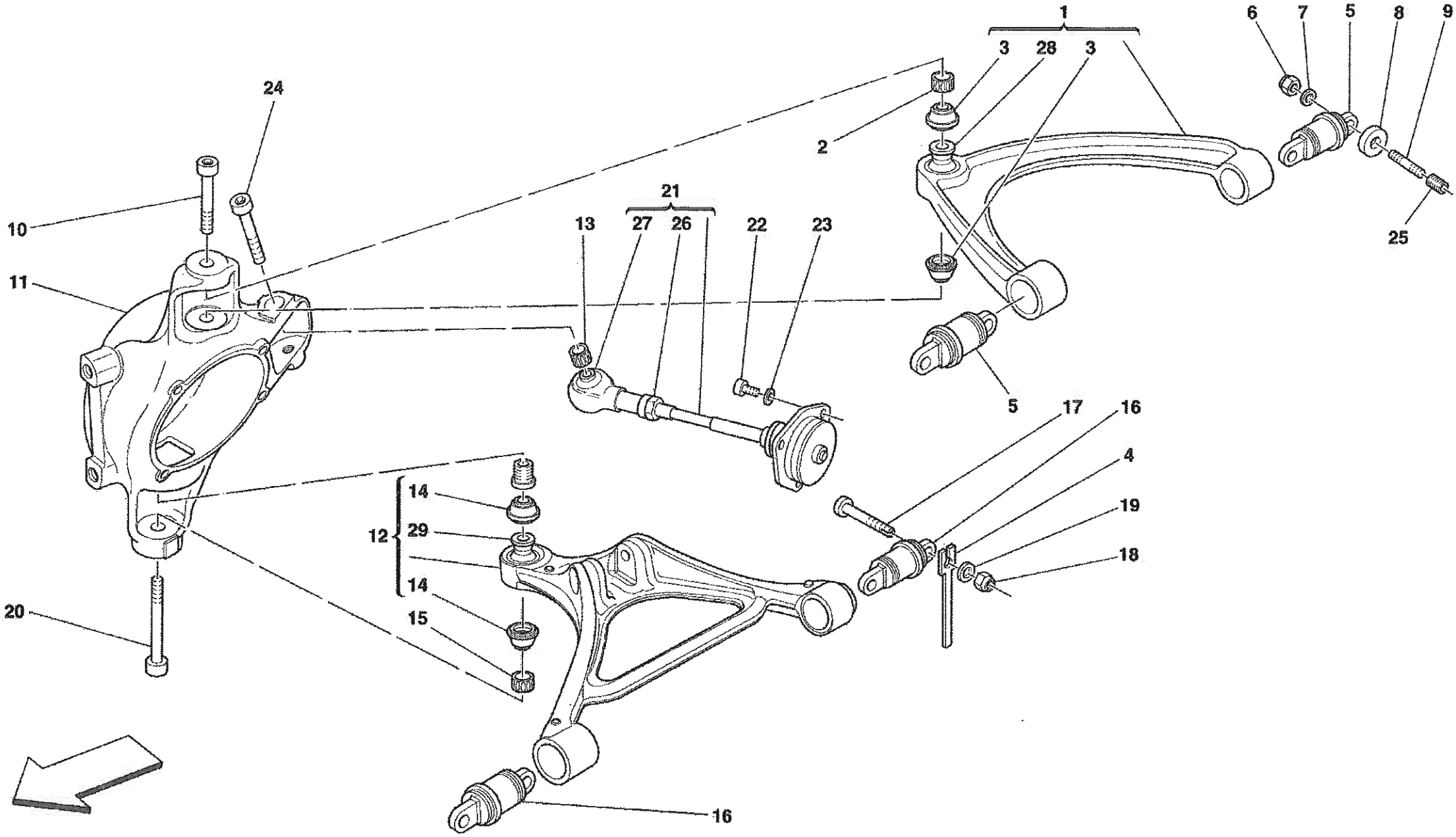
1
3
28
3
2
6
7
5
8
9
24
10
11
21
13
27
26
22
23
25
5
17
16
4
19
18
12
14
29
14
15
20
16

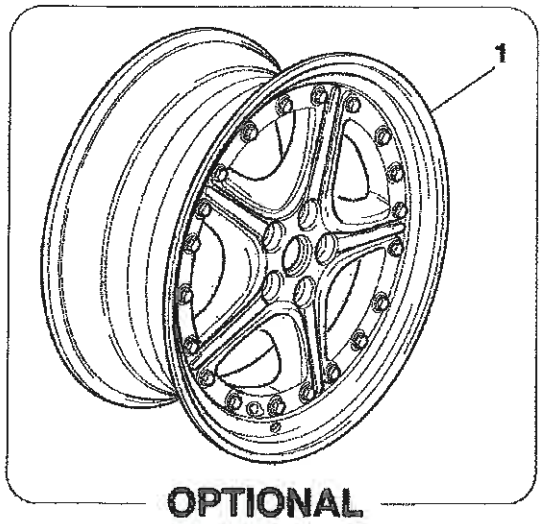
1
OPTIONAL

8

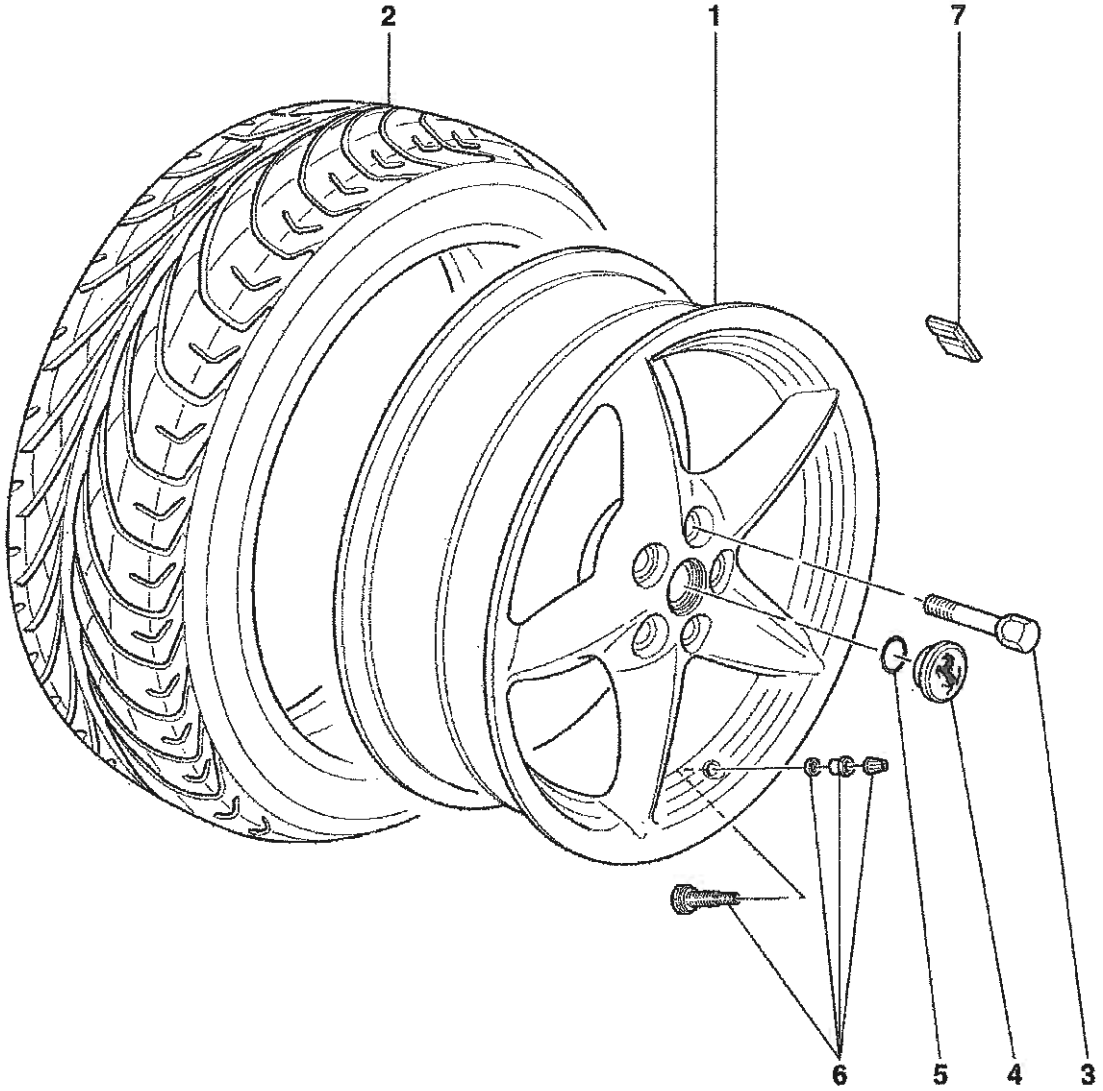
2
1
7
6
5
4
3

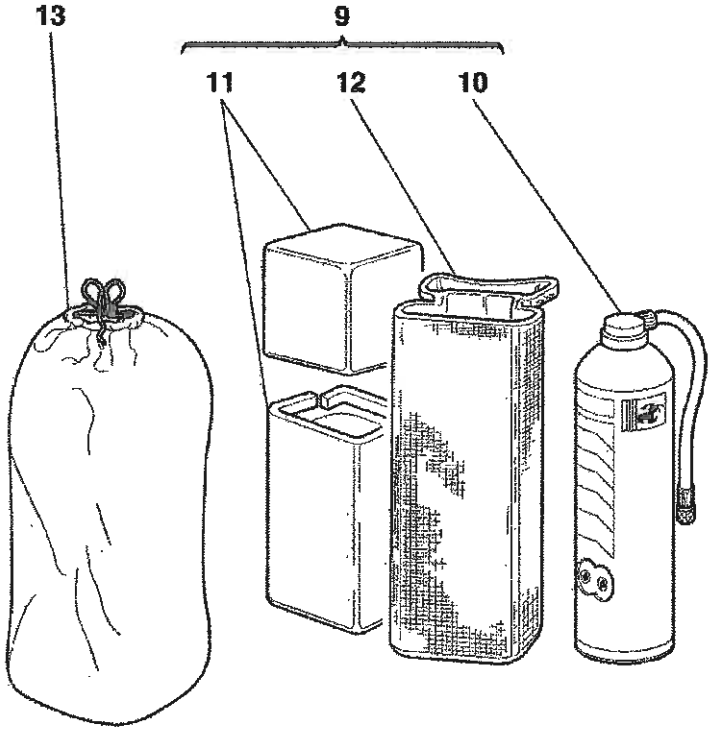
13
9
11
12
10

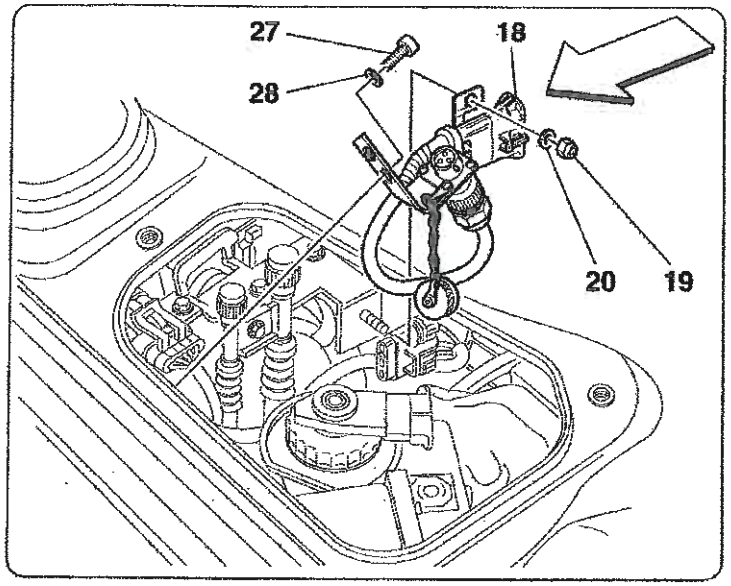

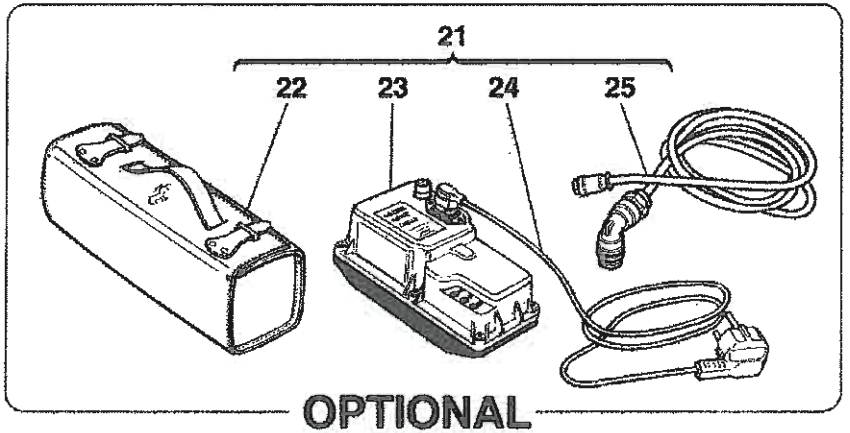

OPTIONAL

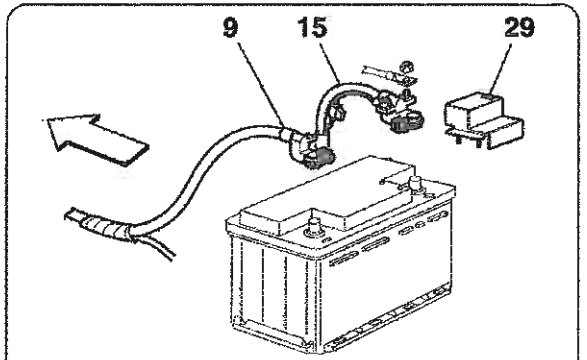

Cavi con piombo
Soluzione non più fornita
Cables with lead
Not as spare part solution

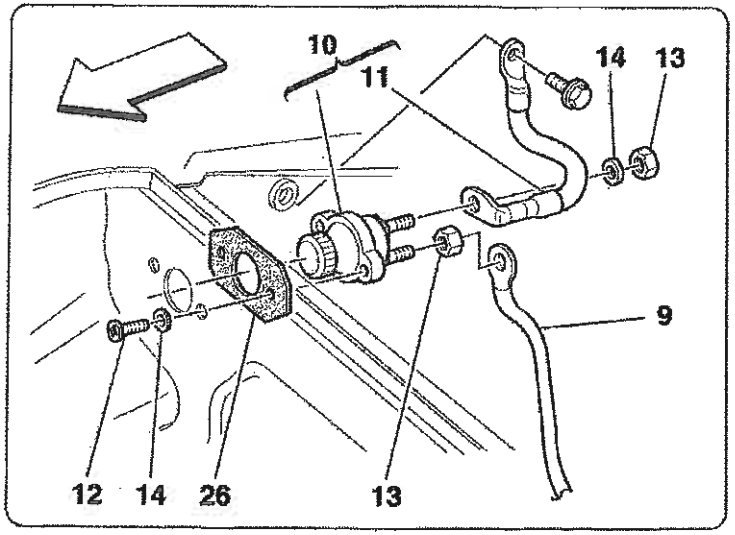

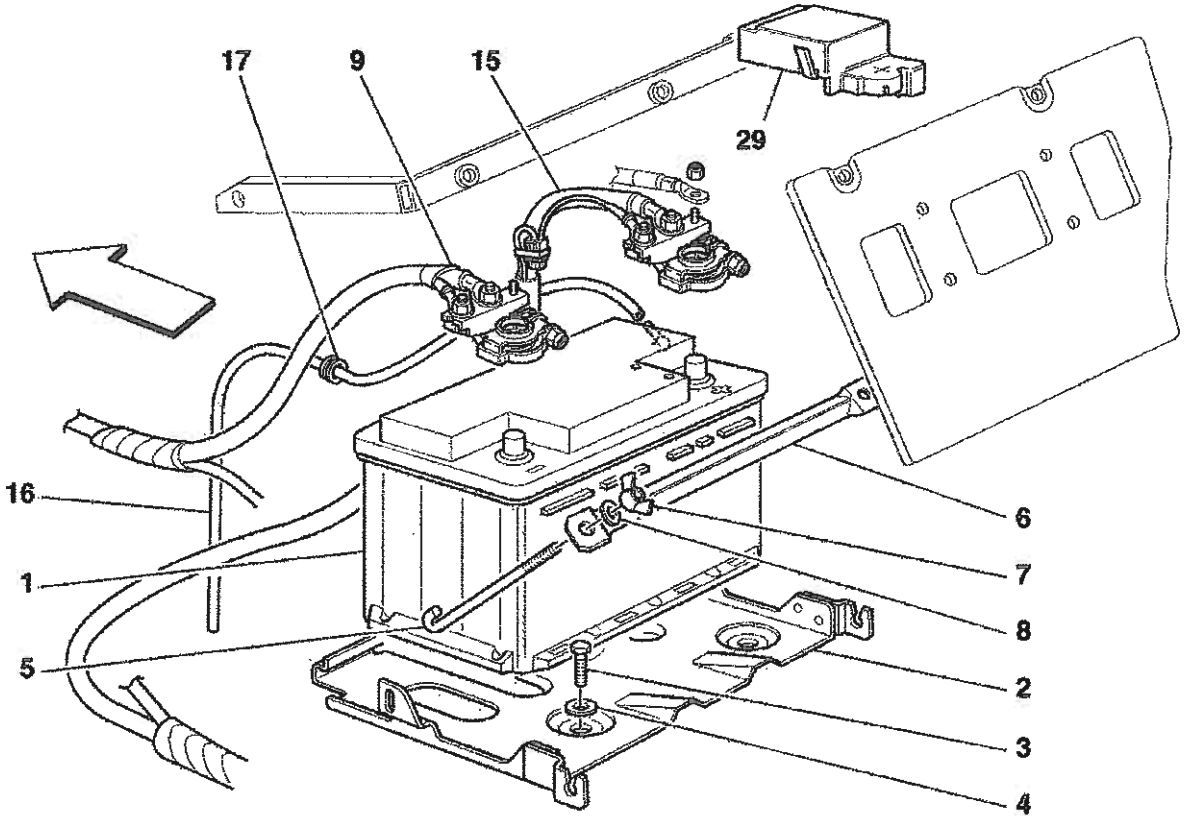

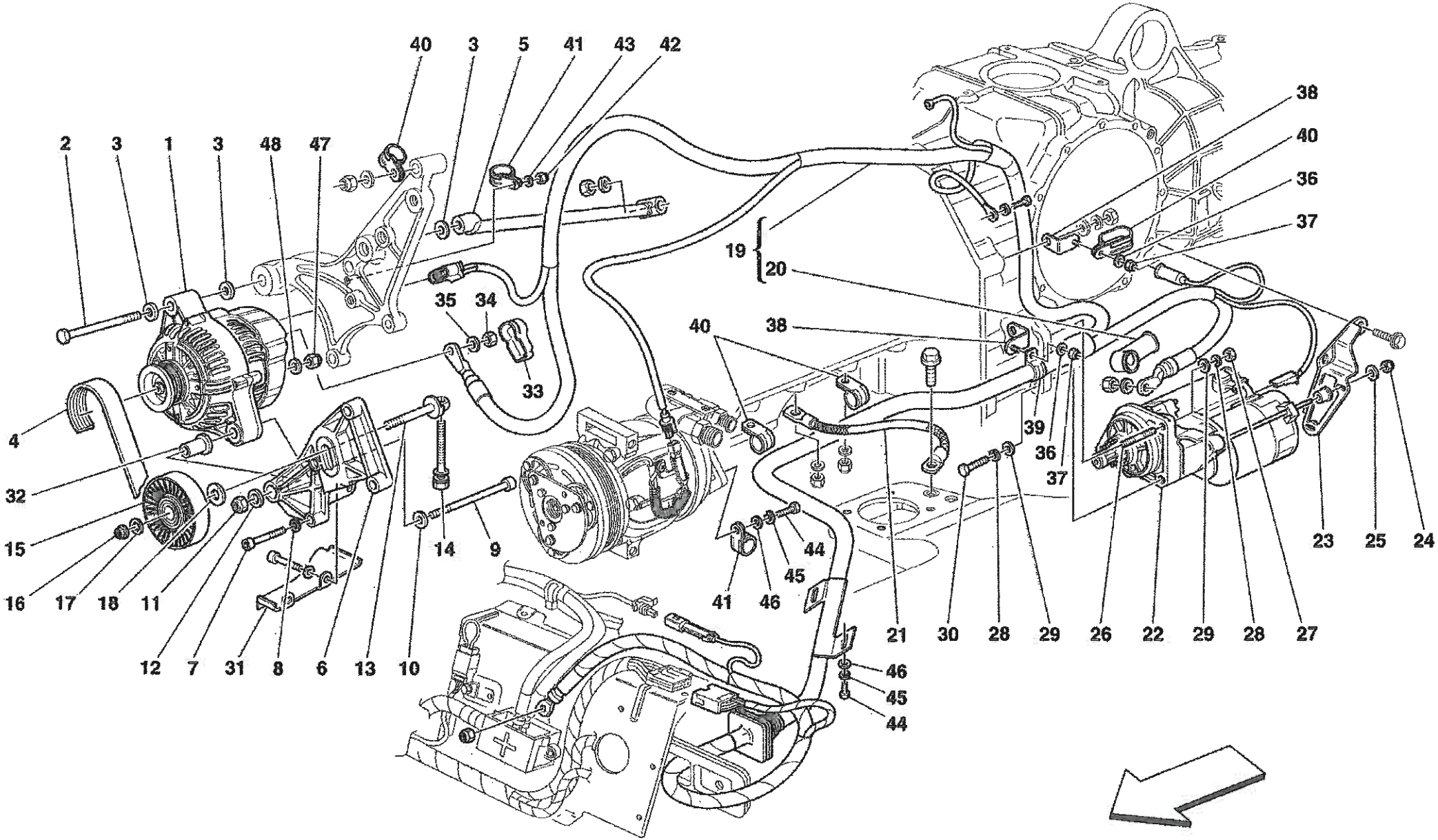
40
3
5
41
43
42
2
3
1
3
48
47
38
40
36
37
19
20
35
34
33
40
38
4
32
15
16
17
18
11
12
7
31
8
6
13
10
14
9
41
46
45
44
39
36
37
23
25
24
21
30
28
29
26
22
29
28
27
46
45
44

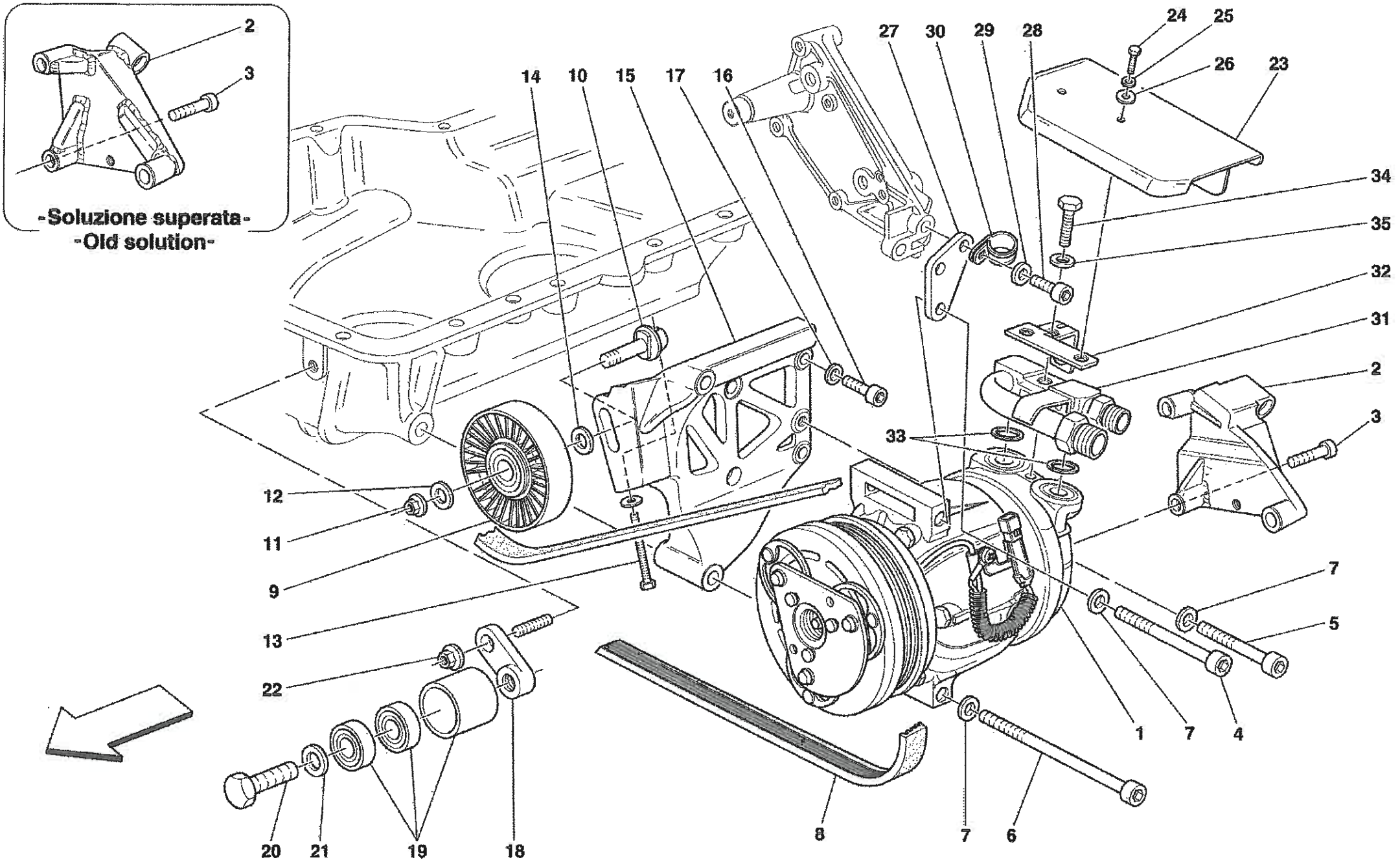
-Soluzione superata-
-Old solution-
2
3
14
10
15
17
16
27
30
29
28
24
25
26
23
34
35
32
31
2
3
33
12
11
9
13
22
20
21
19
18
8
7
6
1
7
4
7
5

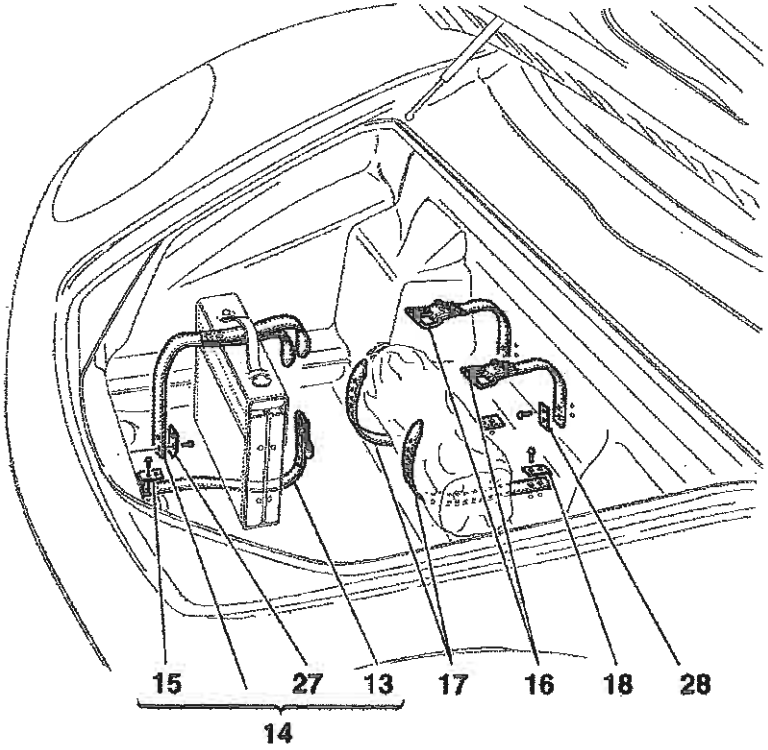

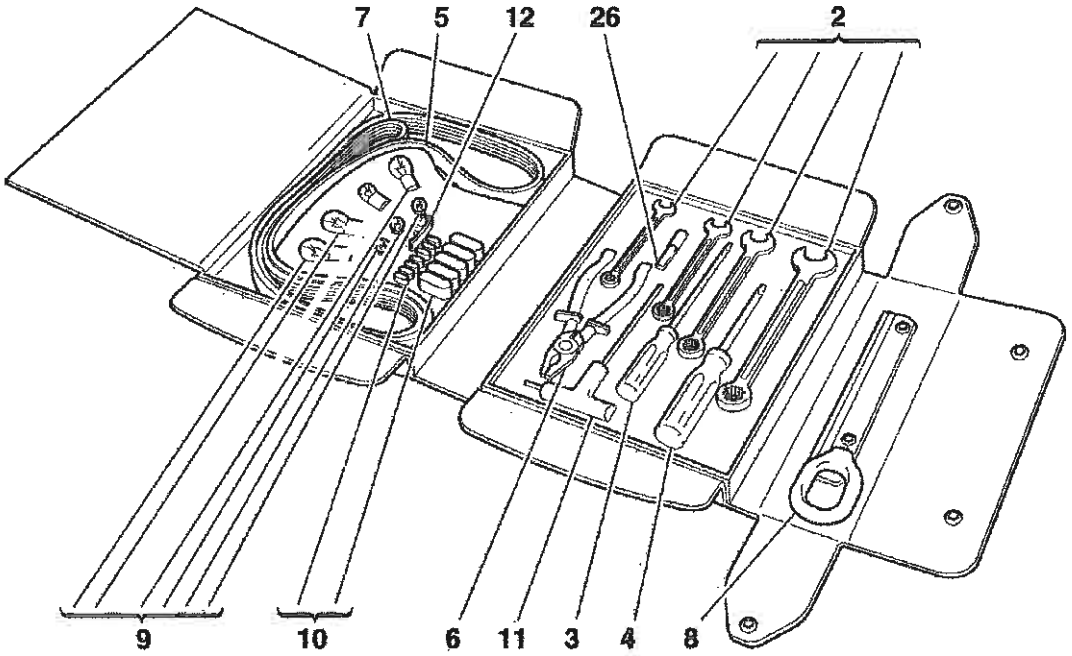

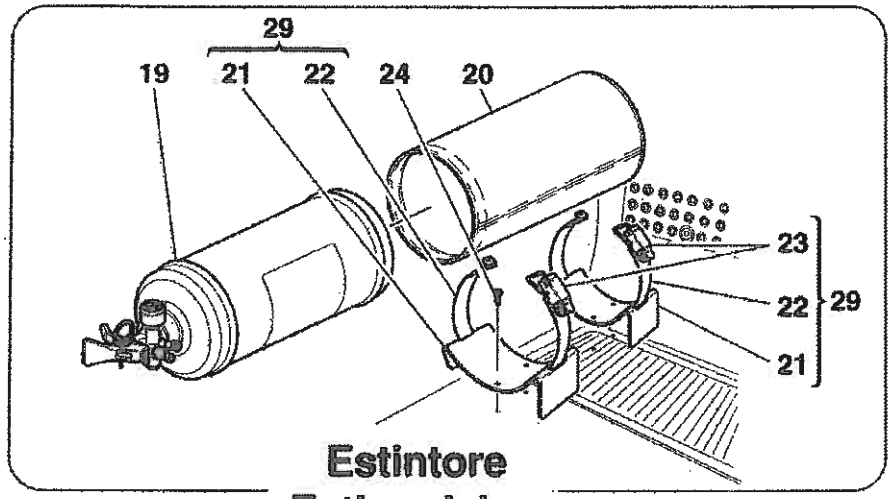

Estintore
Estinguisher

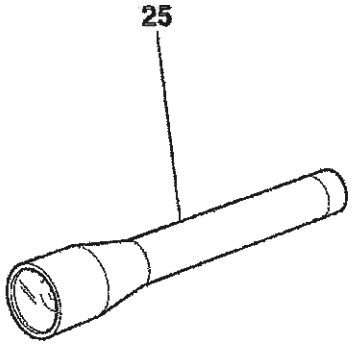

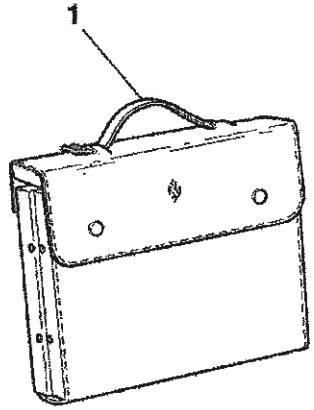

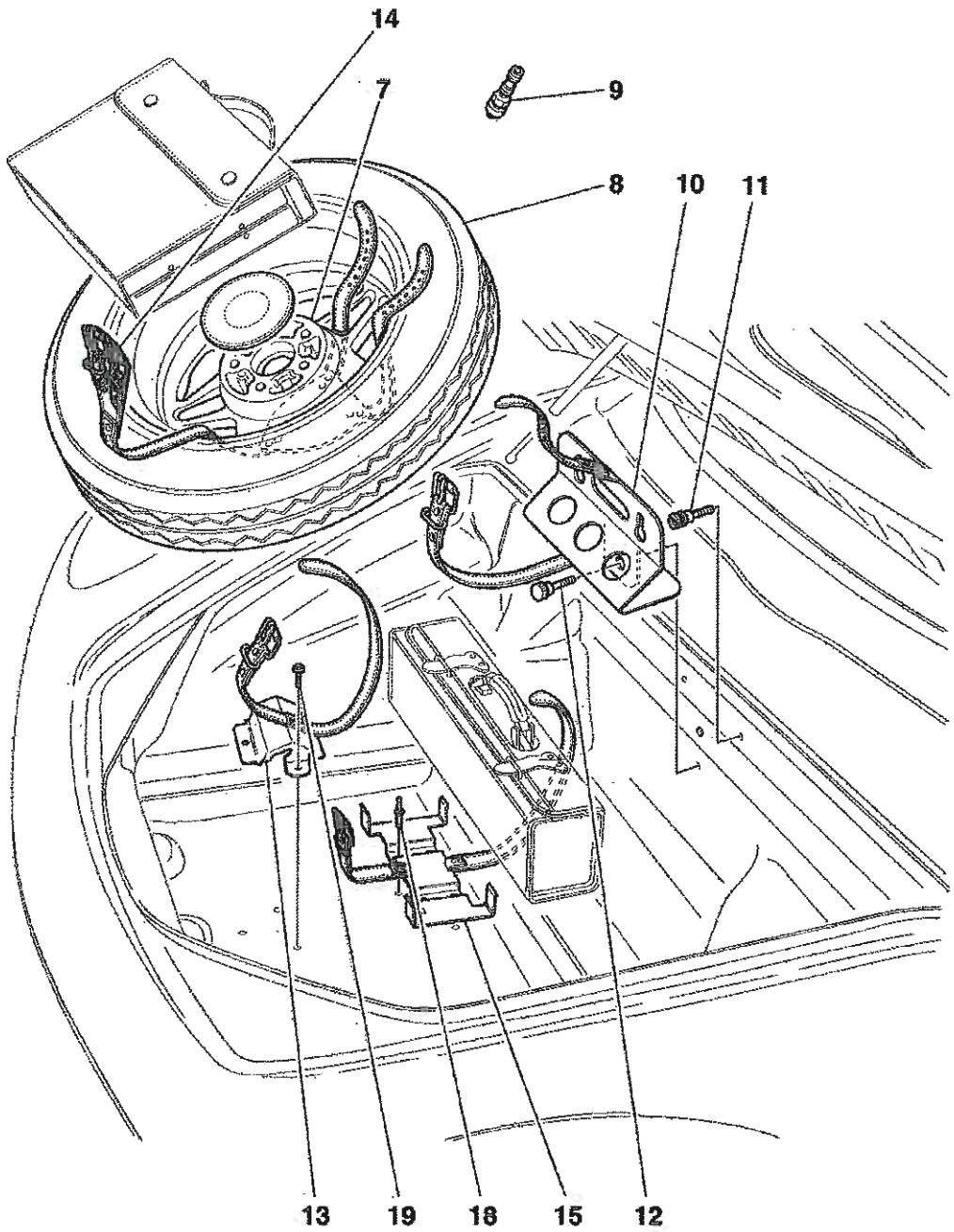
14
7
9
8
10
11
13
19
18
15
12

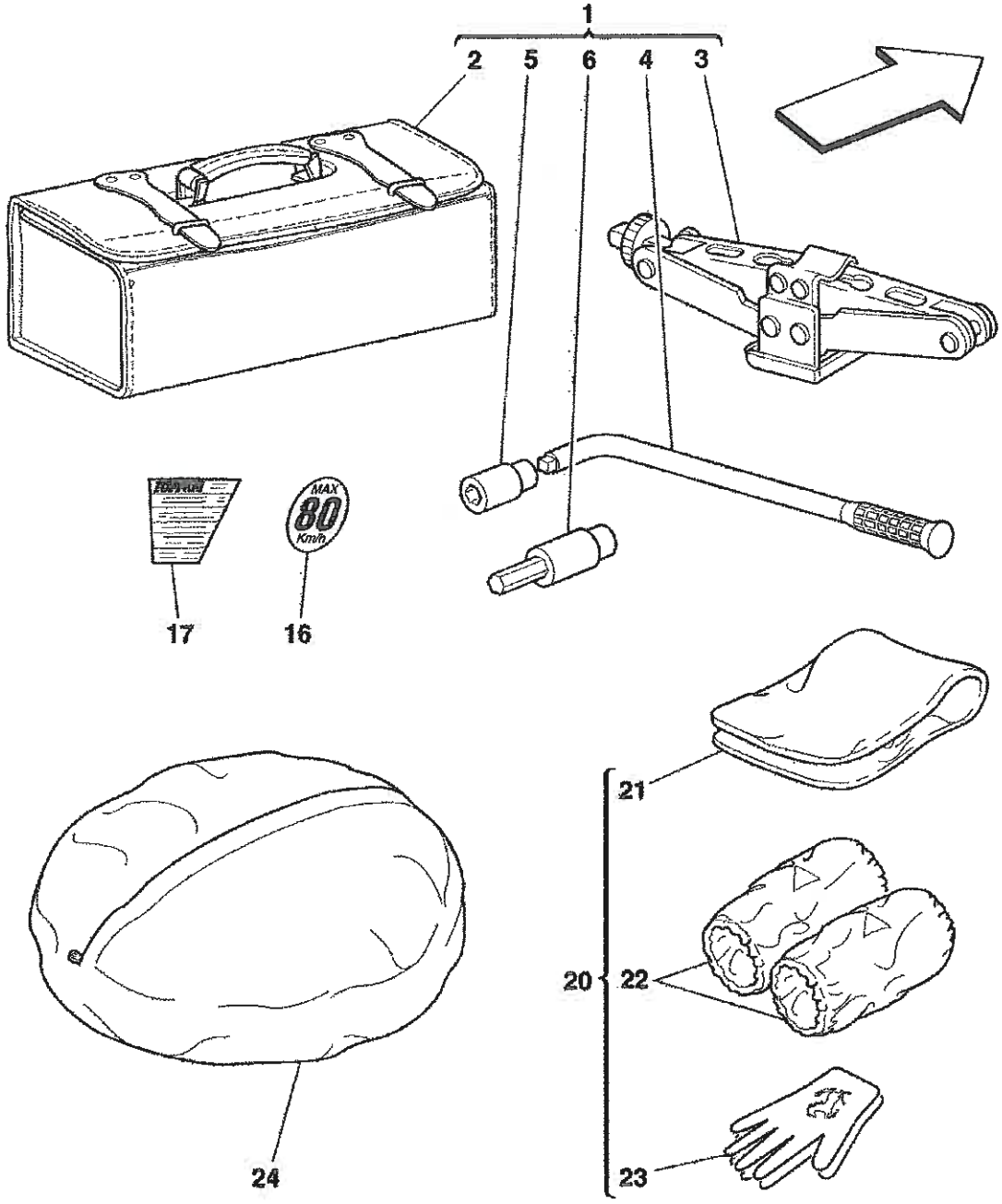
1
2
5
6
4
3
MAX
80
Km/h
17
16
21
20
22
23
24

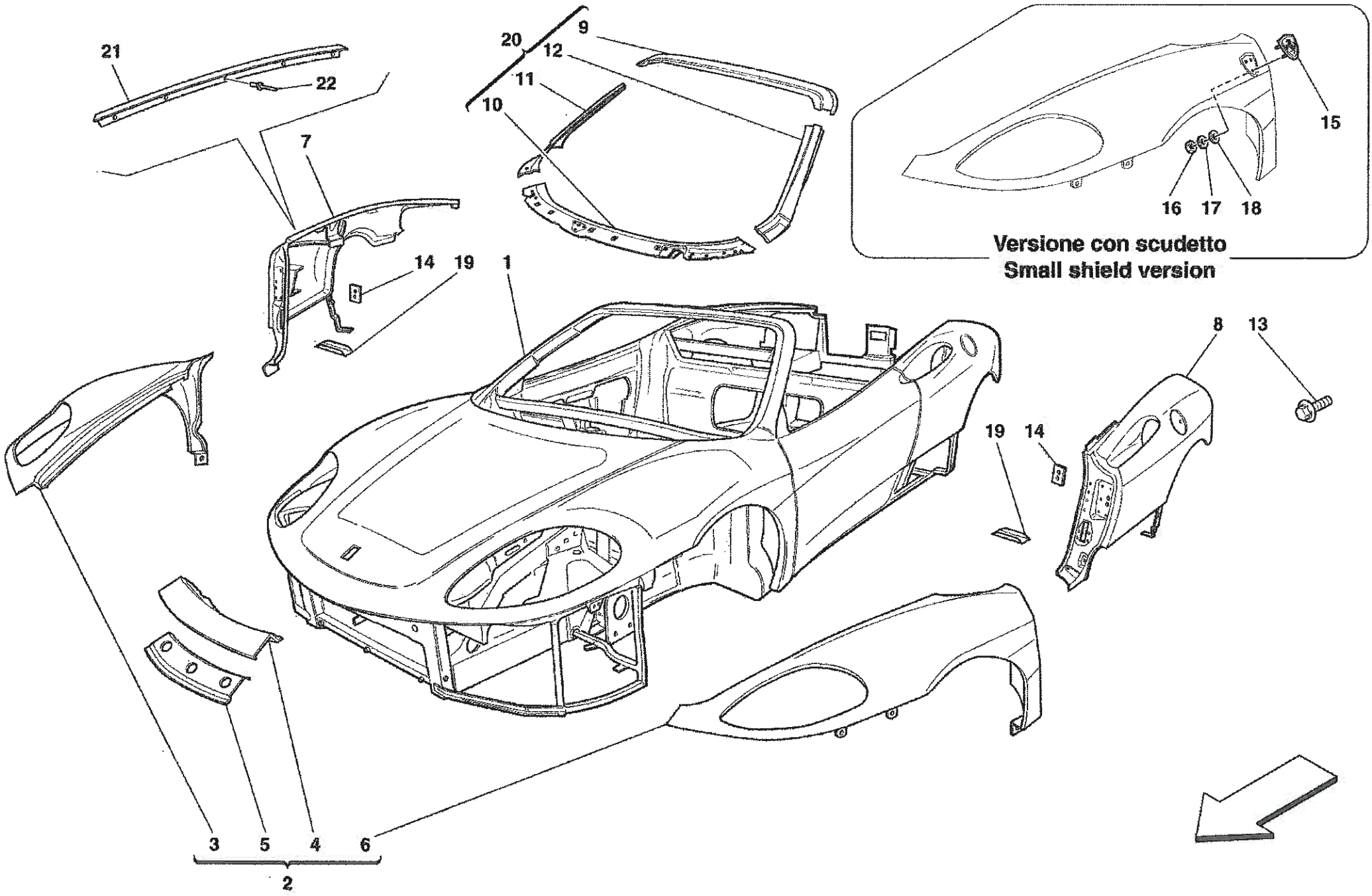
21
22
7
20
9
12
11
10
14
19
1
15
16
17
18
Versione con scudetto
Small shield version
8
13
19
14
3
5
4
6
2

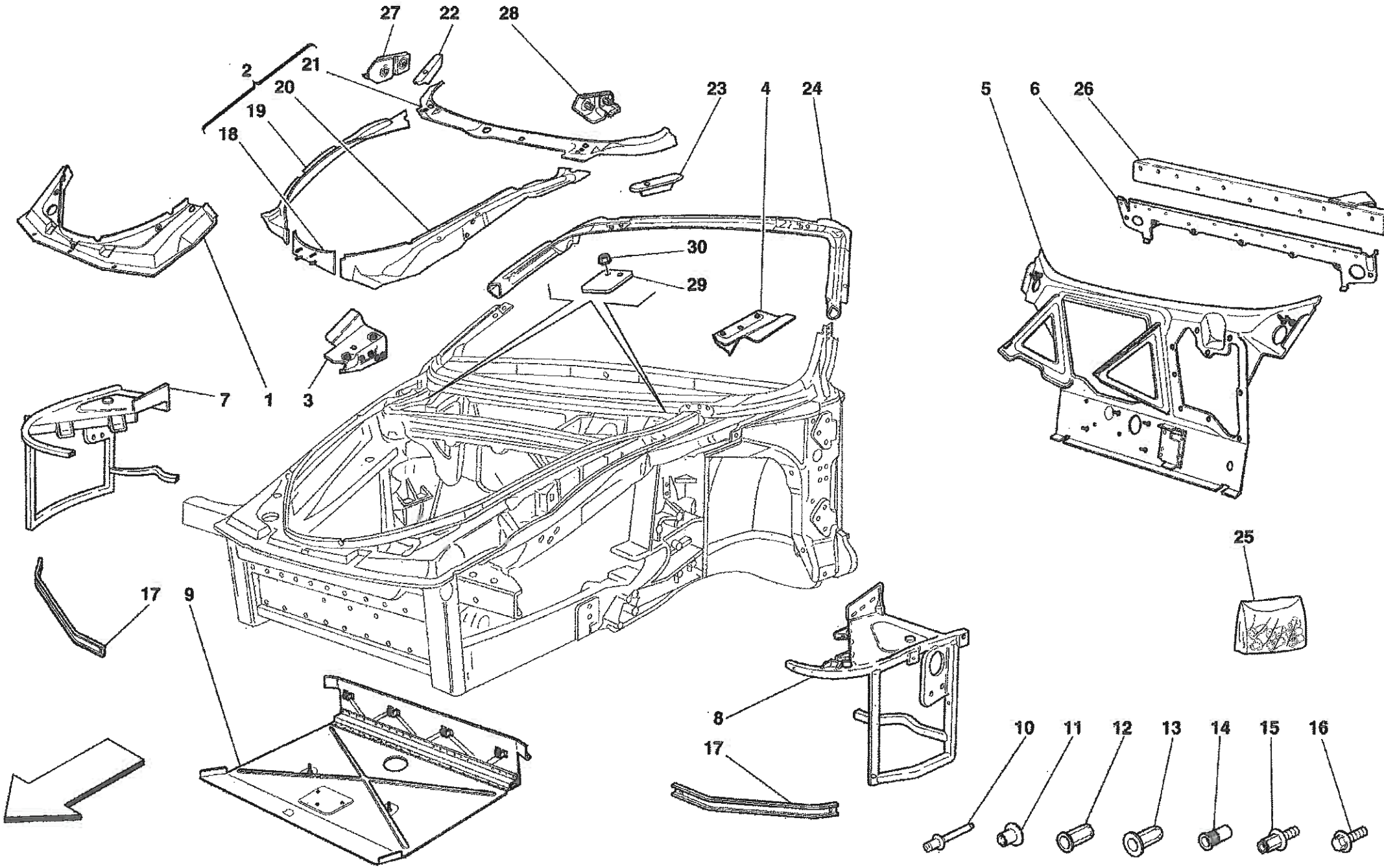
27
22
28
2
21
20
19
18
23
4
24
5
6
26
30
29
7
1
3
17
9
8
17
25
10
11
12
13
14
15
16

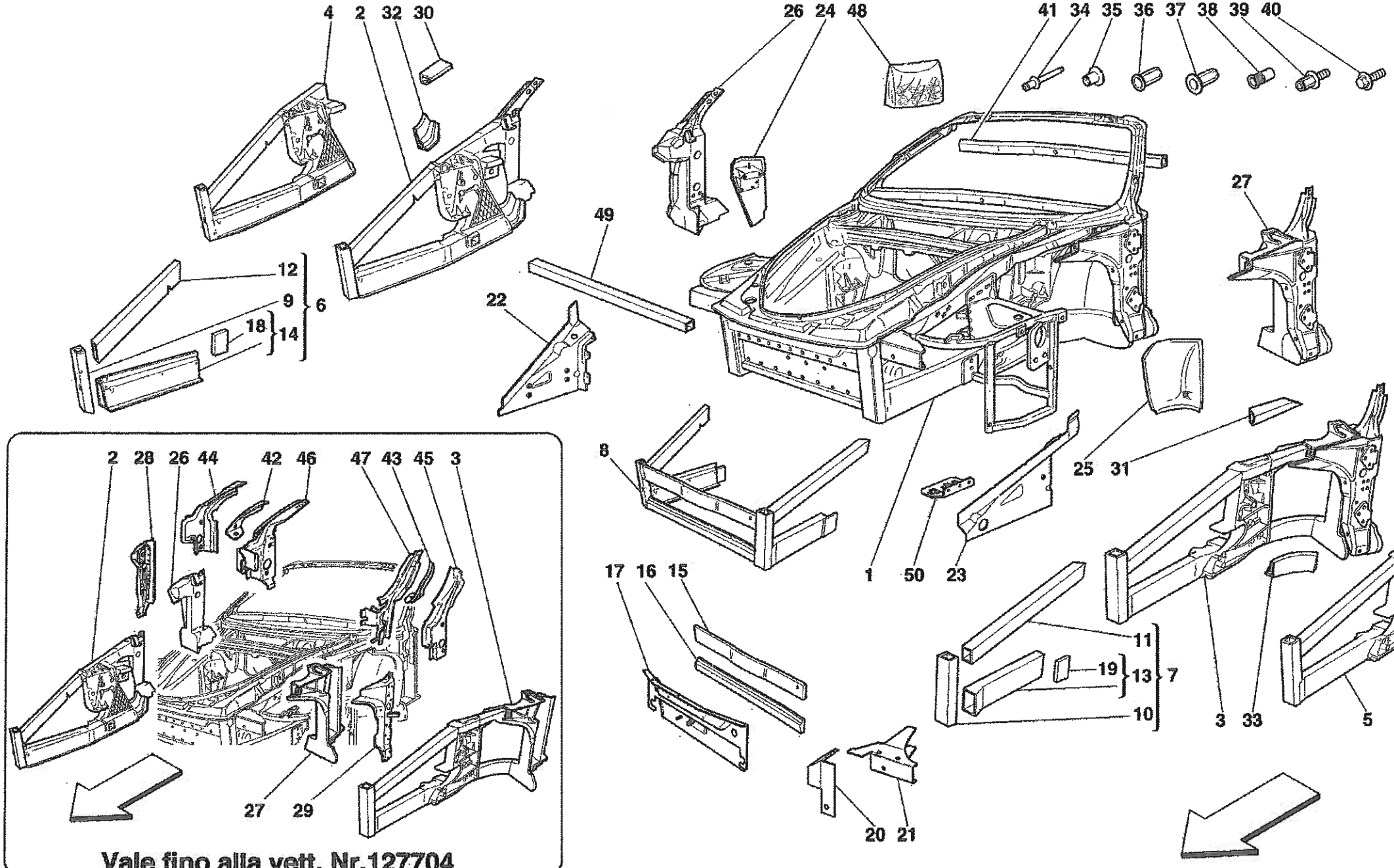
4
2
32
30
26
24
48
41
34
35
36
37
38
39
40
12
9
18
6
14
49
22
27
8
1
50
23
25
31
17
16
15
11
19
13
7
10
3
33
5
20
21
2
28
26
44
42
46
47
43
45
3
27
29
Vale fino alla vett. Nr.127704
Valid till car. Nr.127704

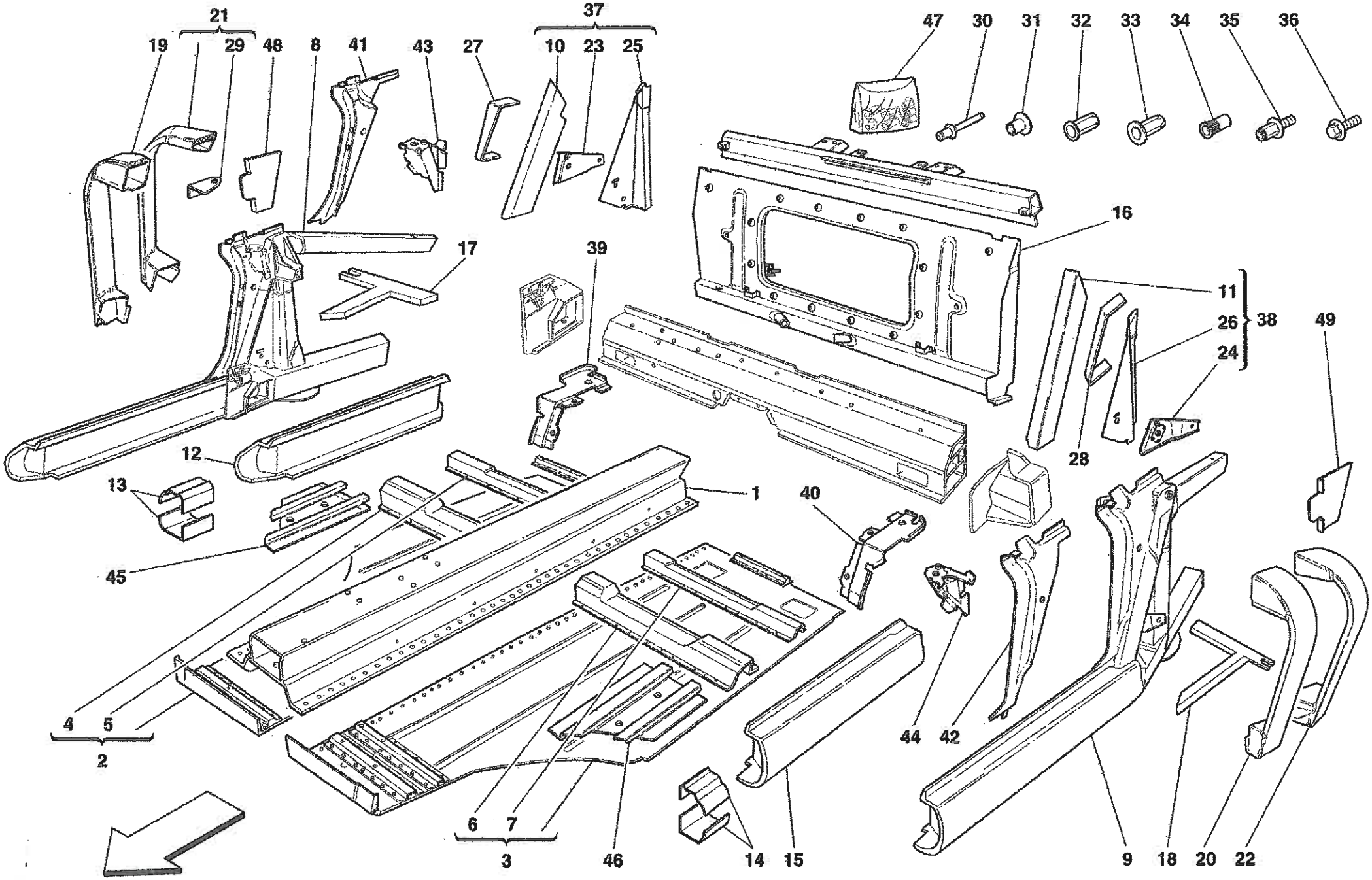
21
19
29
48
8
41
43
27
37
10
23
25
47
30
31
32
33
34
35
36
16
17
39
11
26
24
38
49
28
12
13
1
40
45
4
5
2
6
7
3
46
14
15
44
42
9
18
20
22

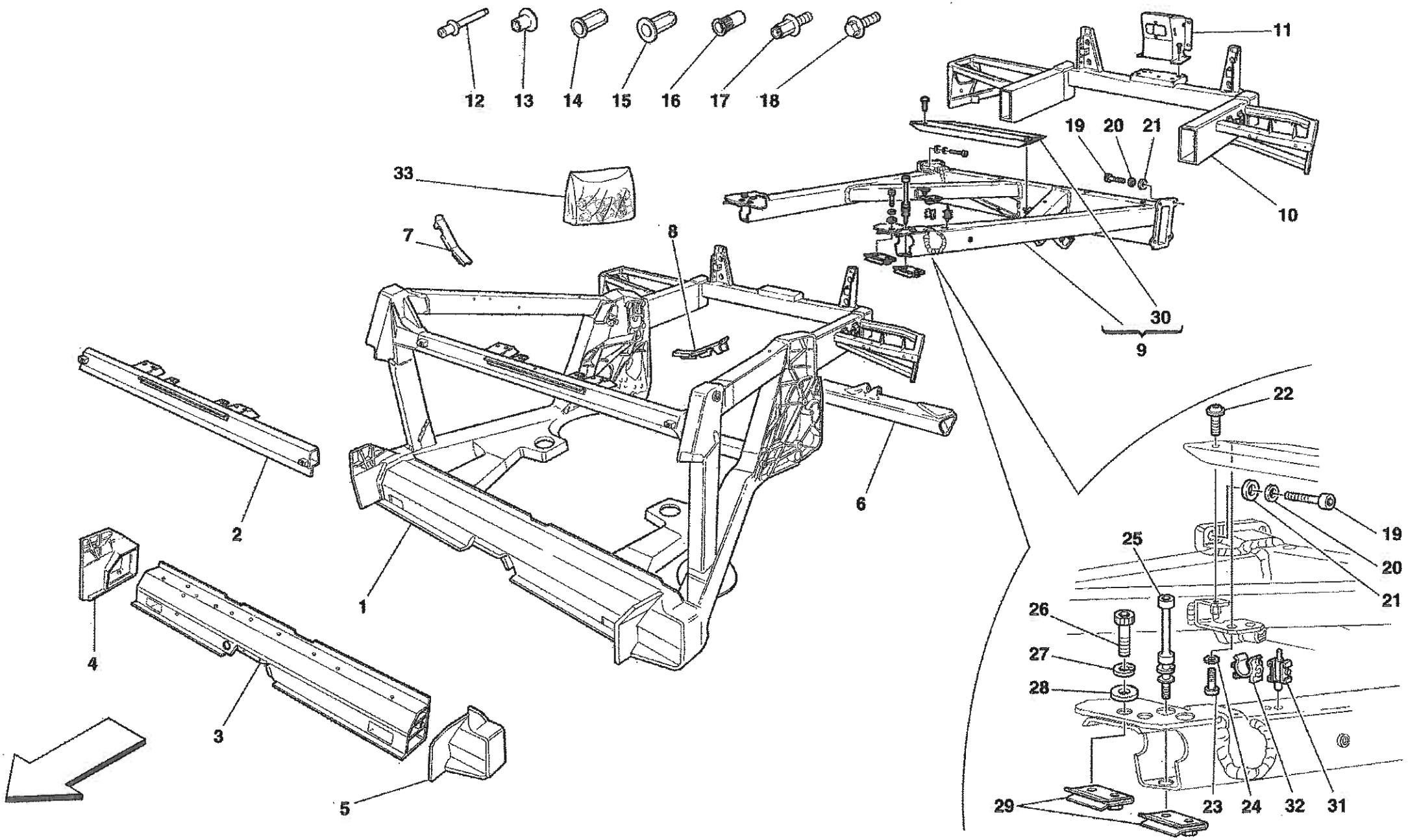
12
13
14
15
16
17
18
11
19
20
21
10
33
7
8
30
9
22
2
1
6
19
20
21
25
26
27
28
4
3
5
29
23
24
32
31

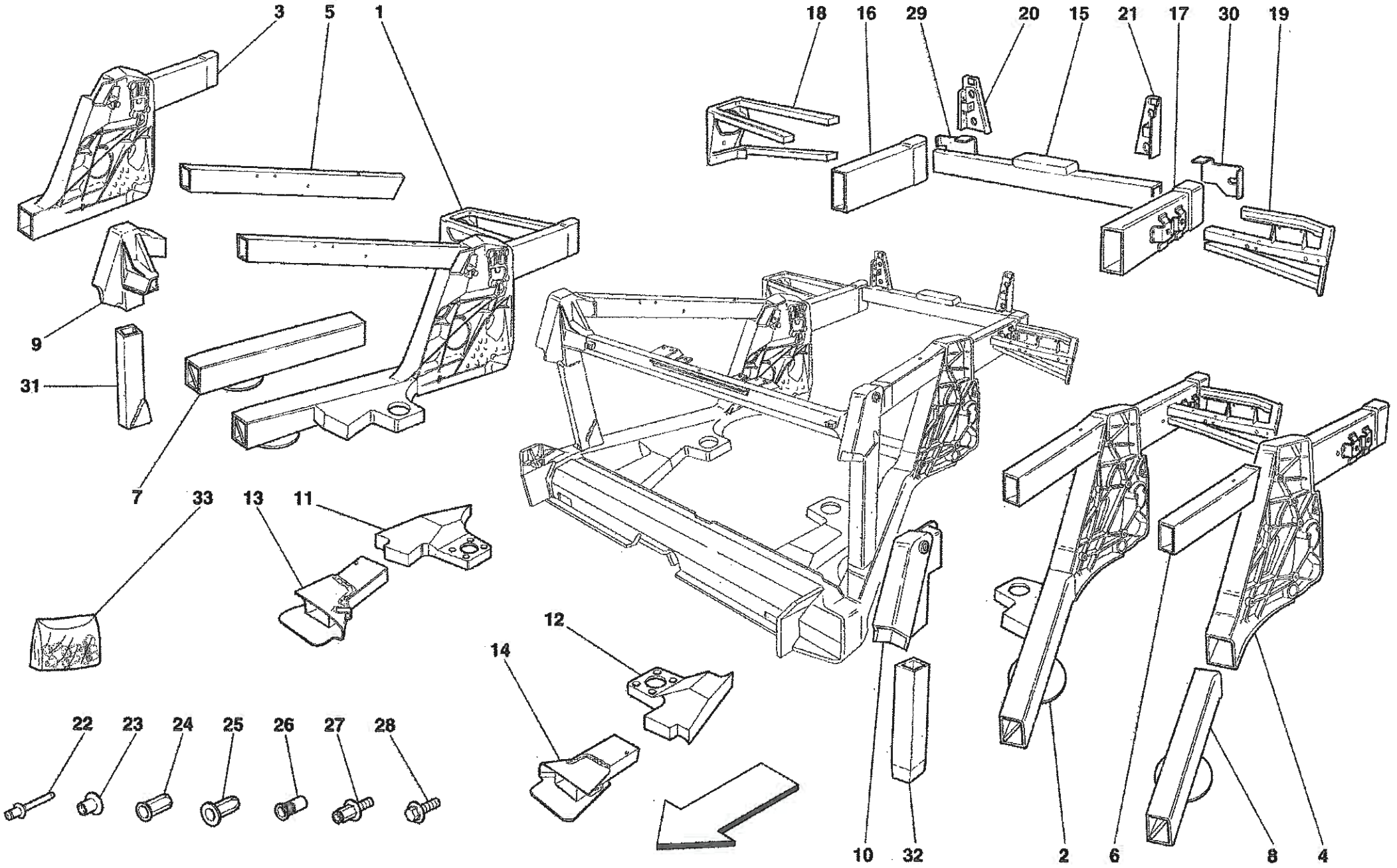
3
5
1
18
16
29
20
15
21
17
30
19
9
31
7
33
13
11
12
14
22
23
24
25
26
27
28
10
32
2
6
8
4

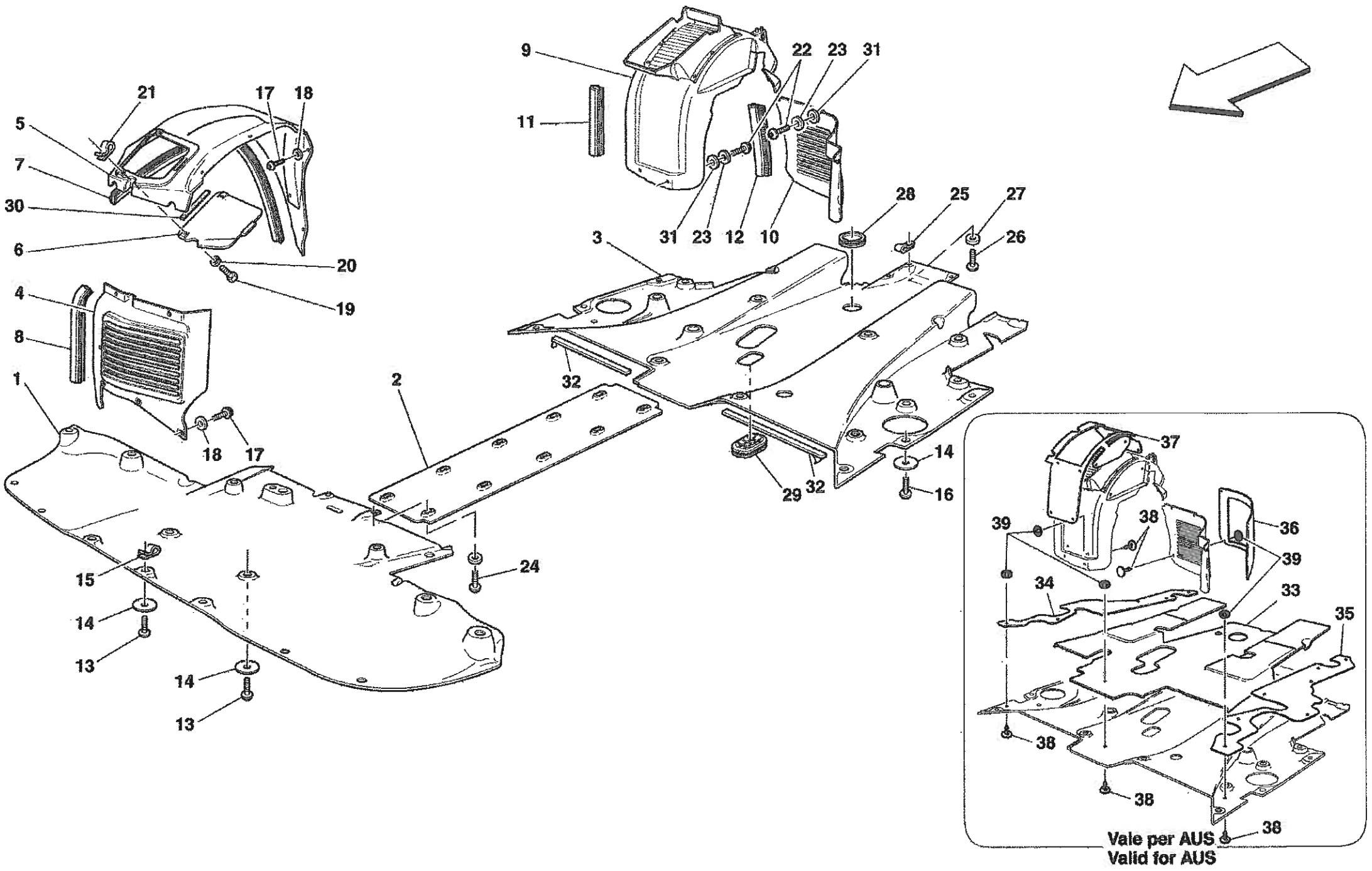
9
22
23
31
11
21
17
18
5
7
30
6
20
19
4
8
1
18
17
2
31
23
12
10
28
25
27
26
3
32
14
16
29
32
15
14
13
14
13
24
37
39
38
36
39
34
33
35
38
38
38
Vale per AUS
Valid for AUS

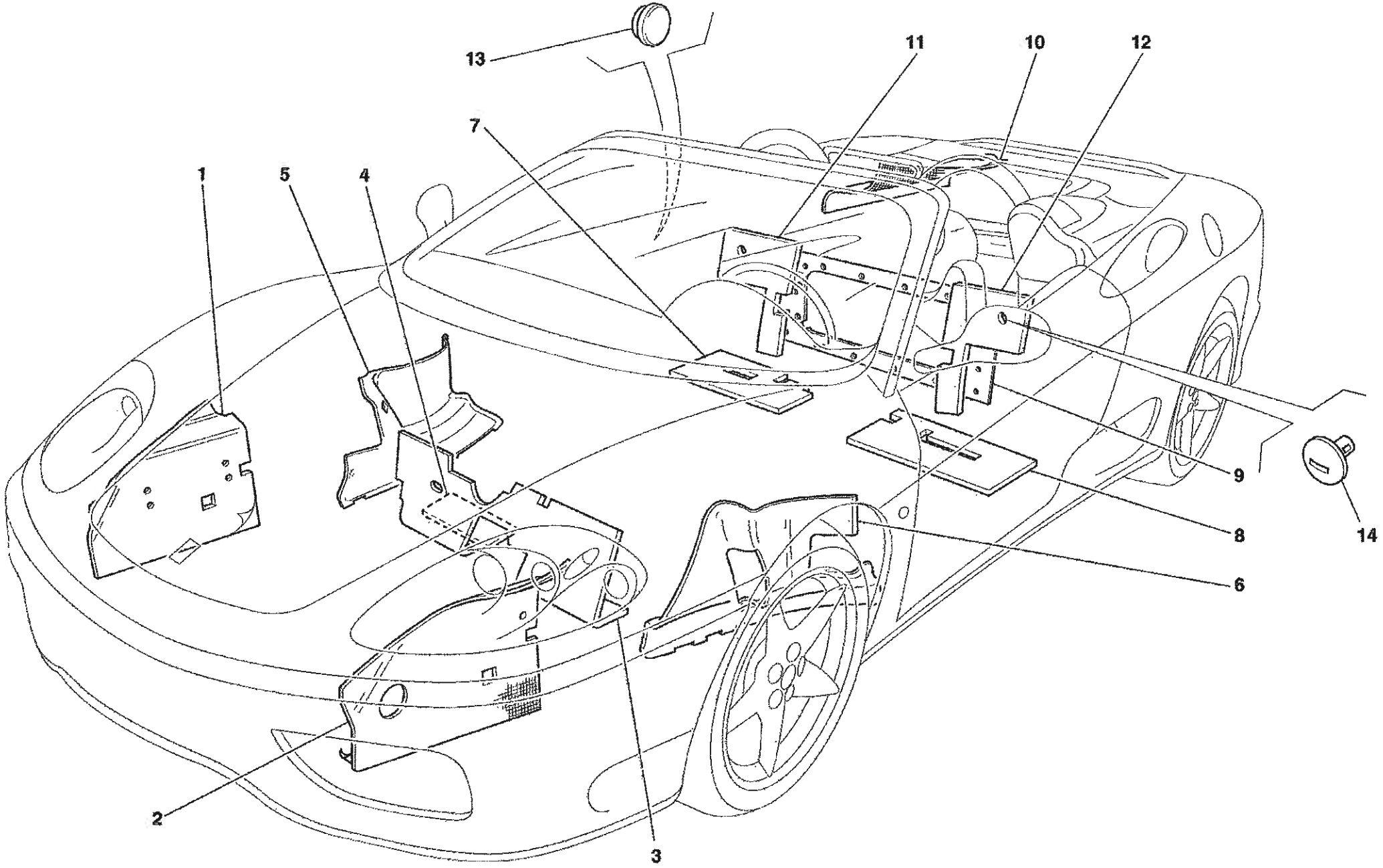
13
11
10
12
7
1
5
4
9
8
14
6
2
3

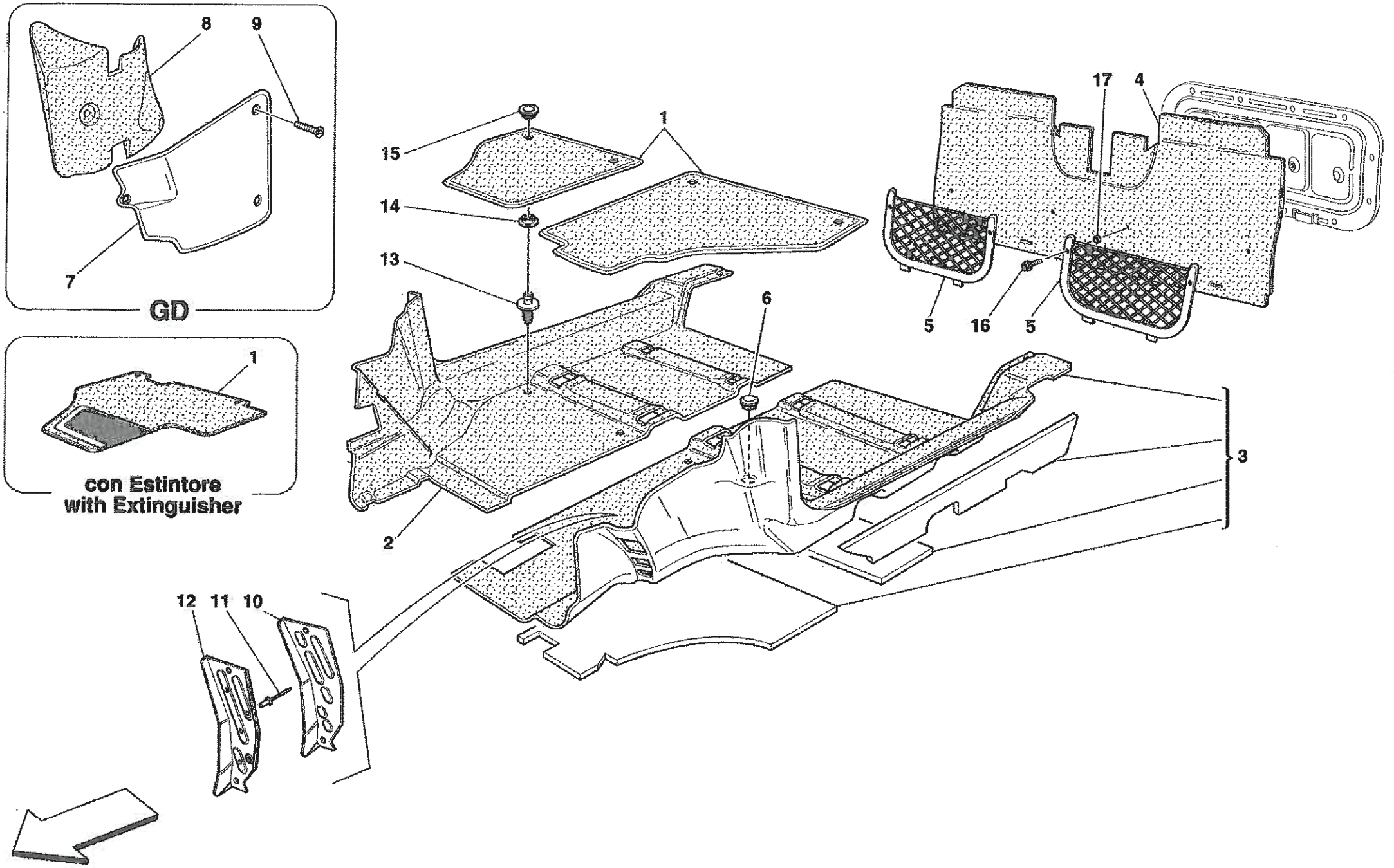
8
9
7
GD
1
con Estintore
with Extinguisher
15
14
13
1
6
2
17
4
5
16
5
3
12
11
10

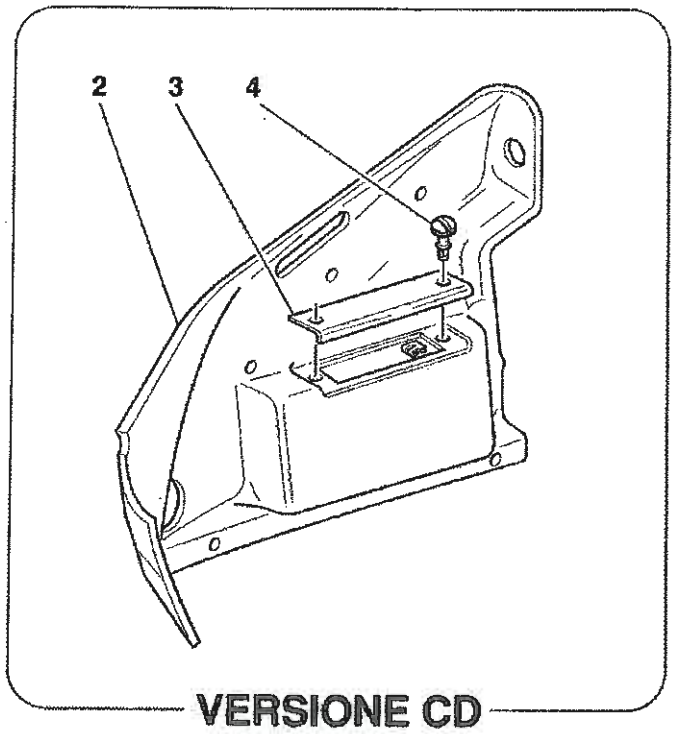
2
3
4
VERSIONE CD

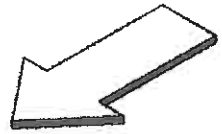

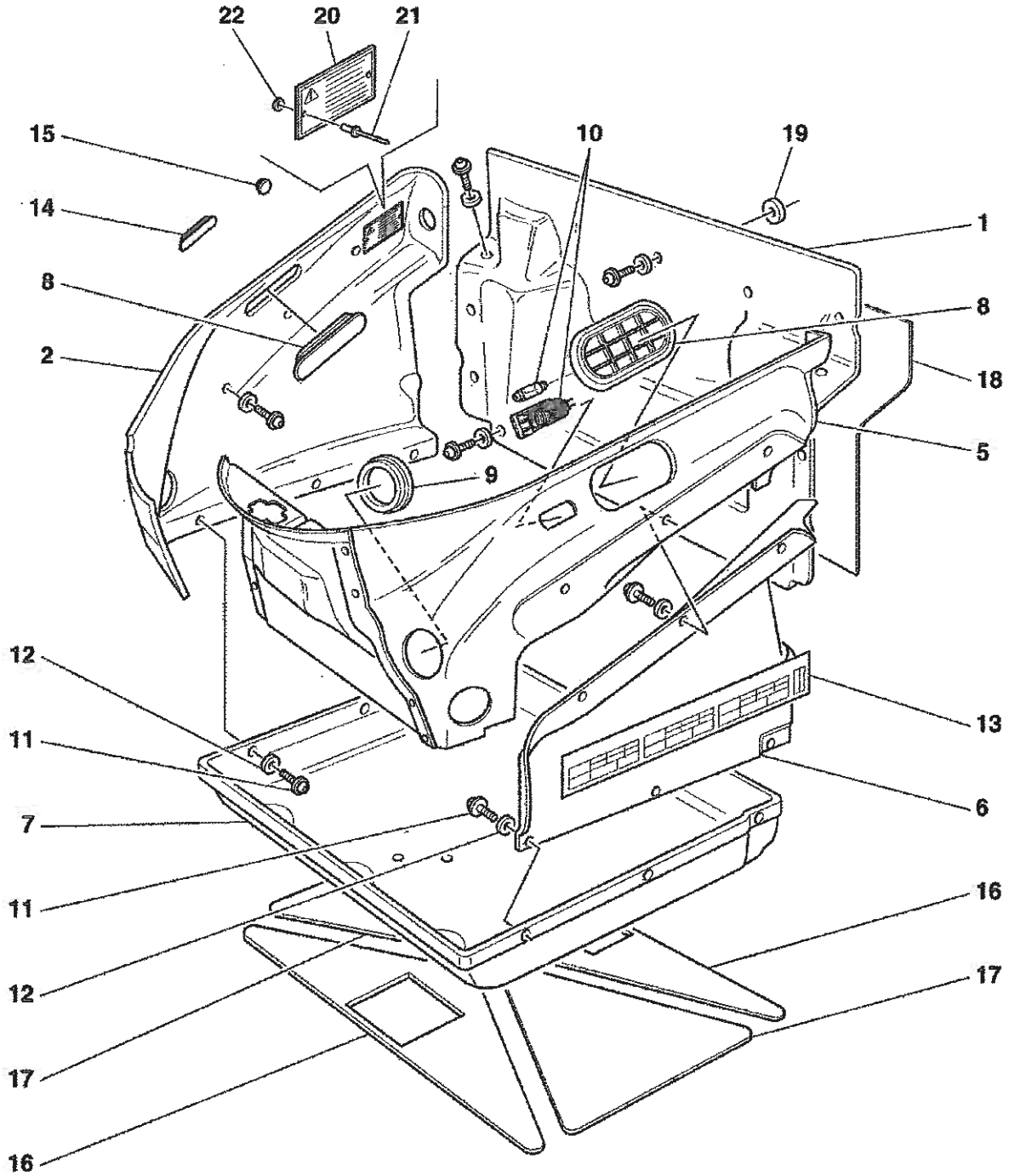
22
20
21
15
14
8
2
10
19
1
8
18
5
9
12
11
7
11
12
17
16
13
6
16
17

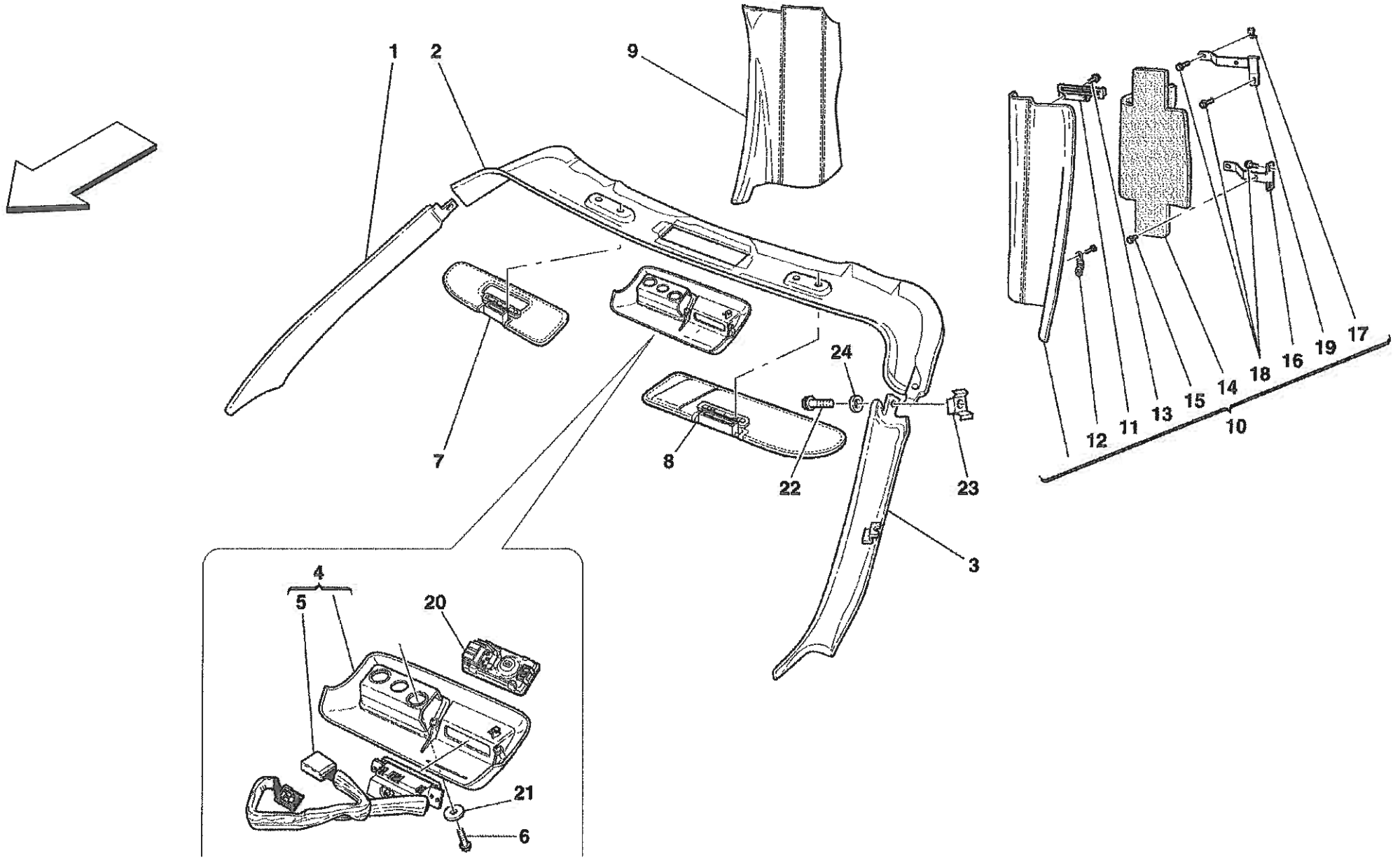
1
2
9
7
8
24
22
23
3
4
5
20
21
6
12
11
13
15
14
18
16
19
17
10

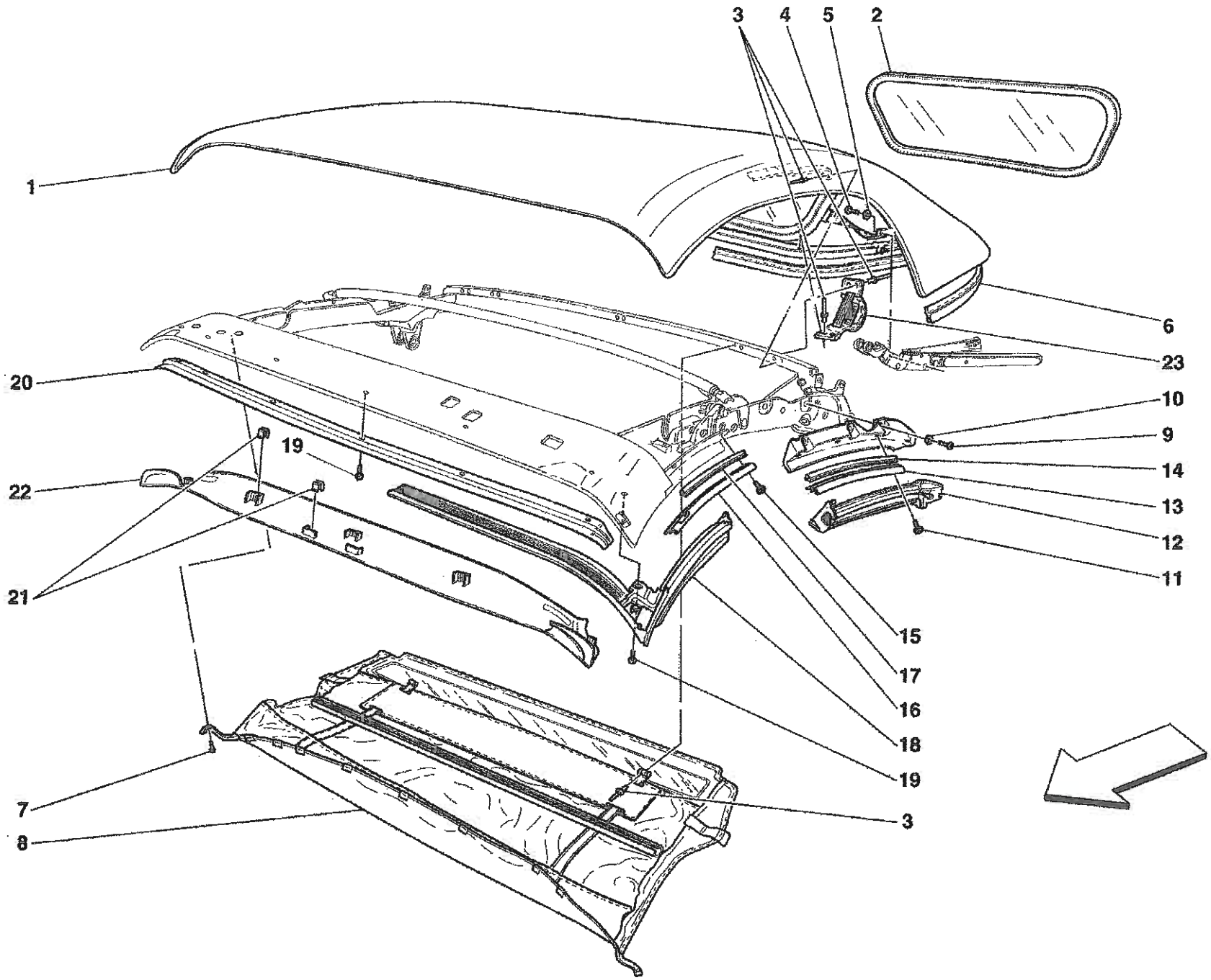
3
4
5
2
1
6
23
20
10
9
19
14
22
13
12
21
11
15
17
16
18
19
7
3
8

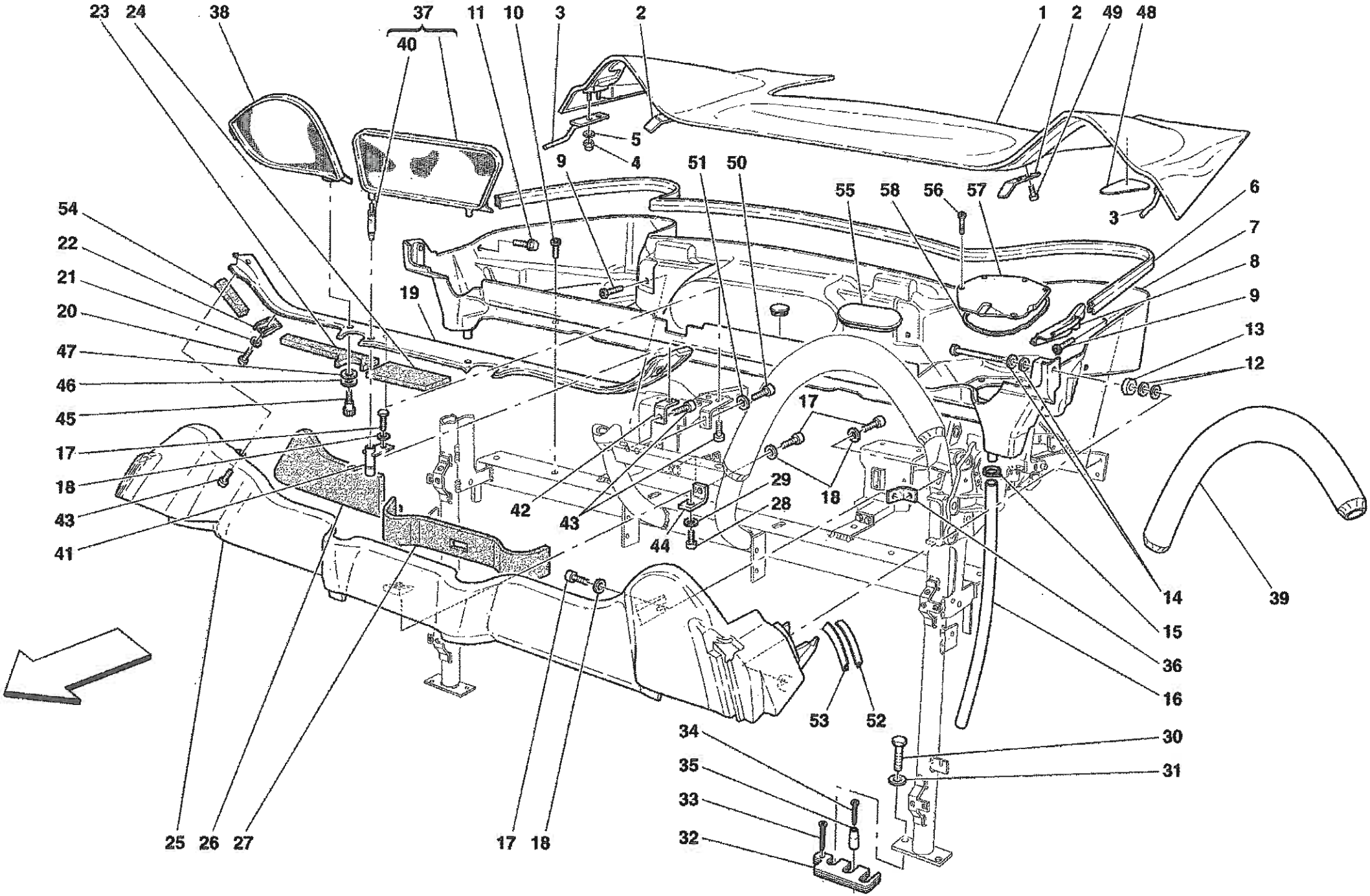
23
24
38
37
40
11
10
3
2
1
2
49
48
5
4
9
51
50
55
58
56
57
3
6
7
8
9
13
12
54
22
21
20
47
46
45
17
18
43
41
19
42
43
44
17
18
29
28
14
39
15
36
16
53
52
34
35
33
32
30
31
25
26
27
17
18

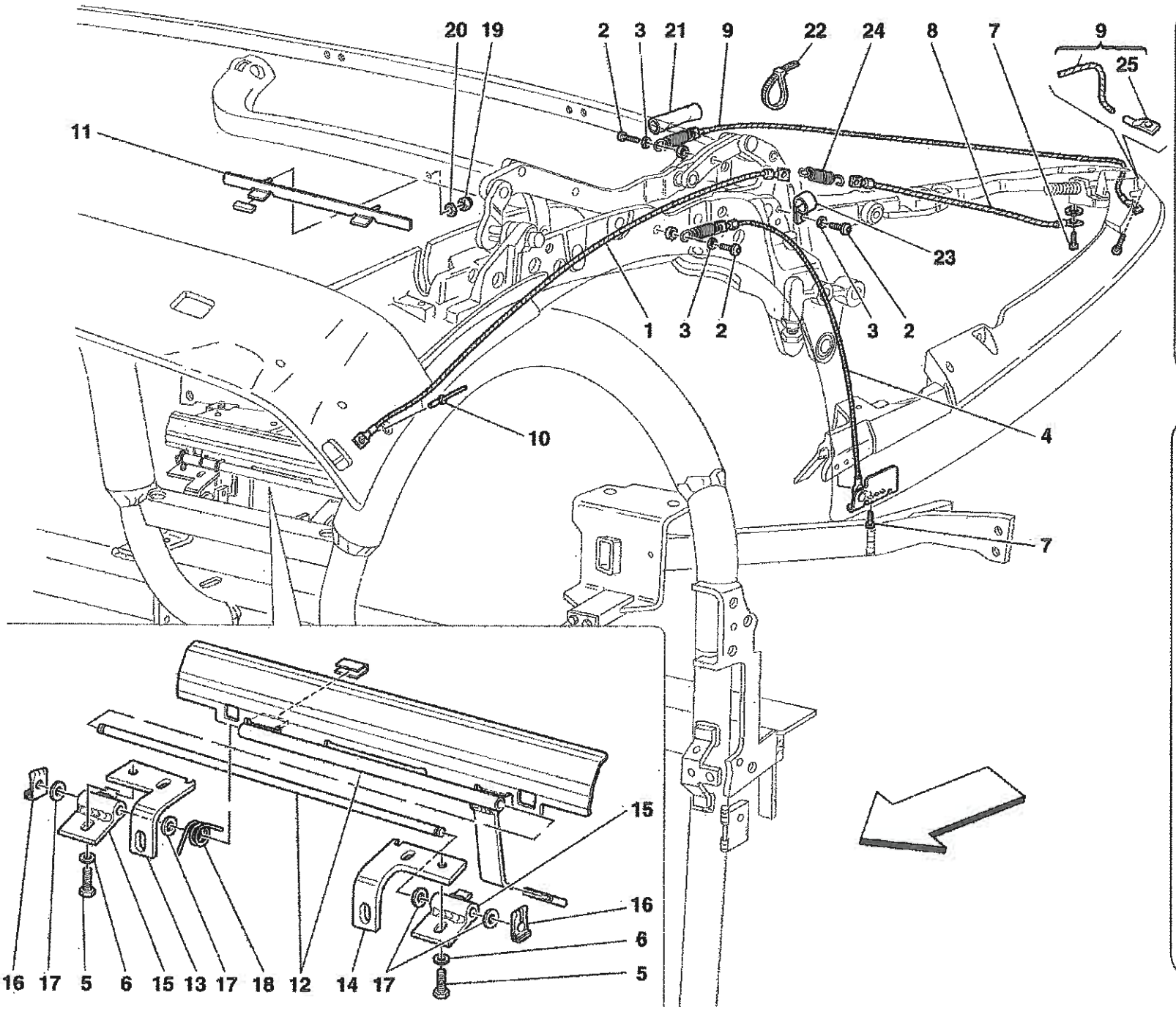

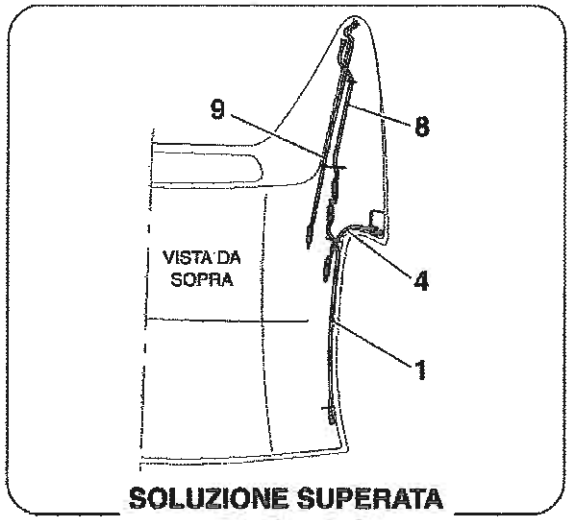

SOLUZIONE SUPERATA
OLD SOLUTION

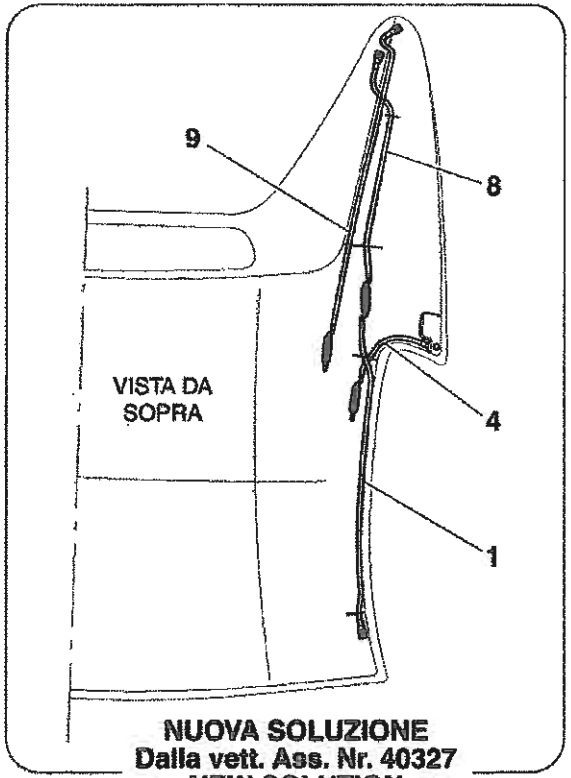

NUOVA SOLUZIONE
Dalla vett. Ass. Nr. 40327
NEW SOLUTION
From car Ass. Nr. 40327

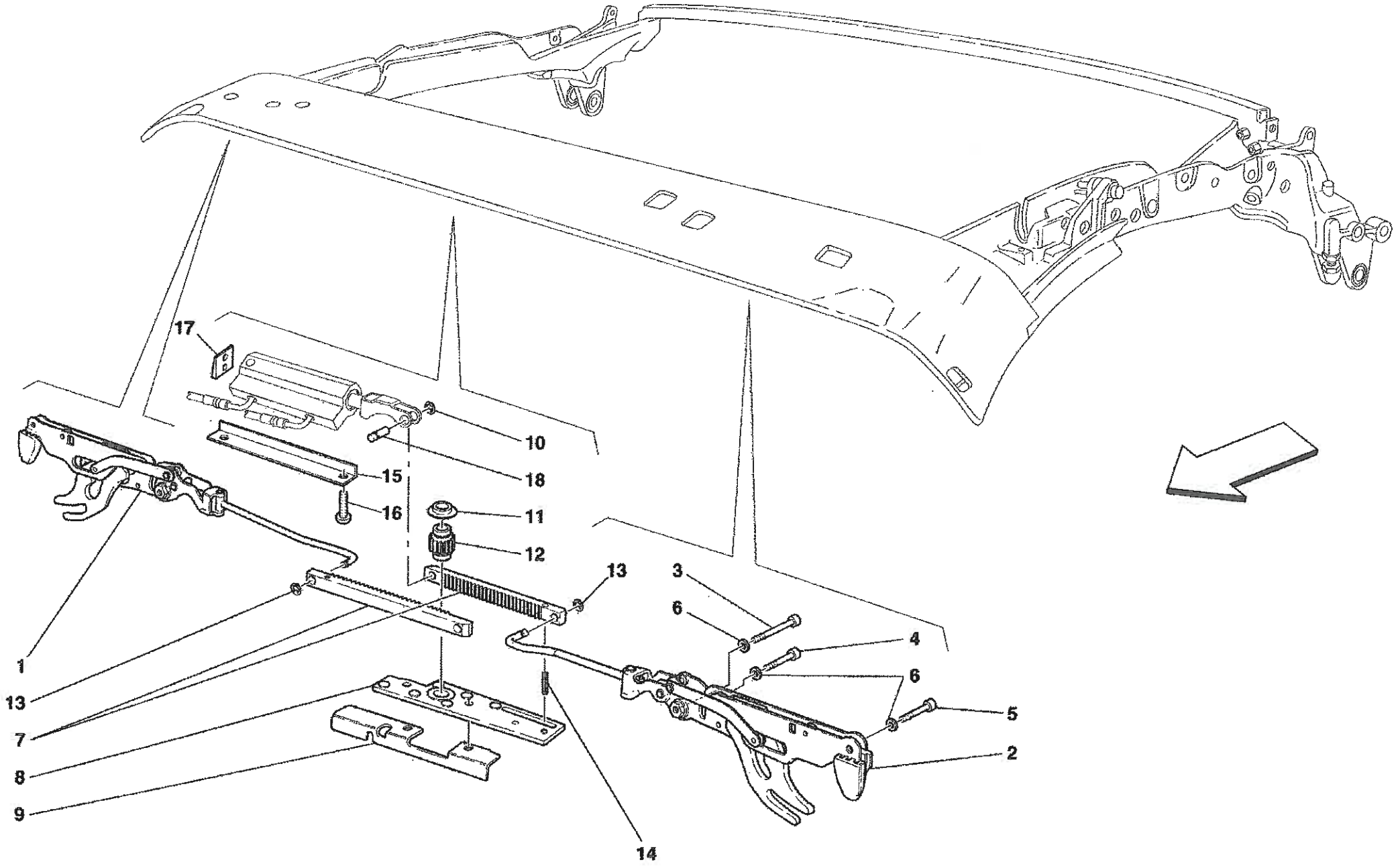
17
10
18
15
16
11
12
13
3
6
4
6
5
2
1
13
7
8
9
14

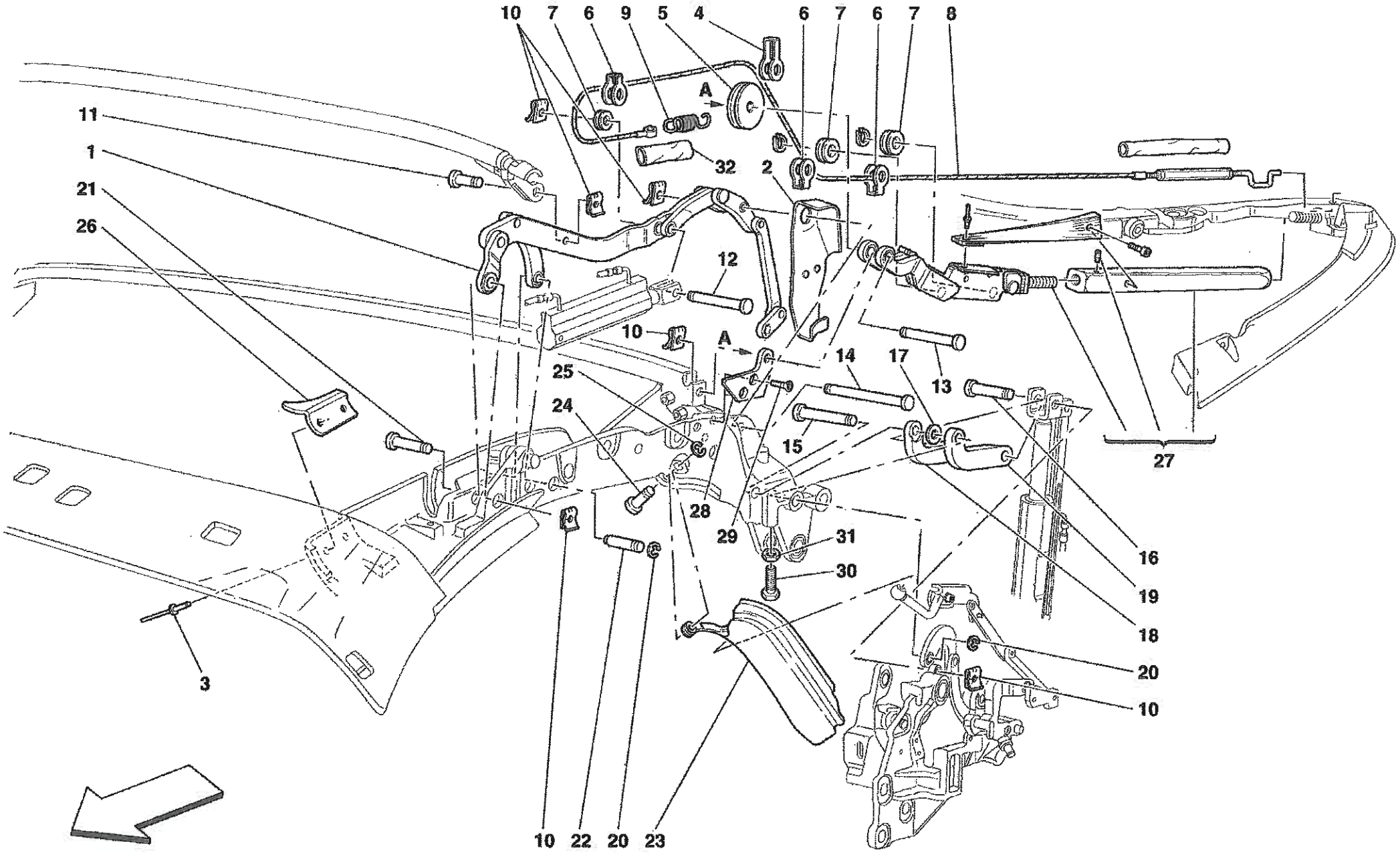
10
7
6
9
5
4
6
7
6
7
8
A
11
1
21
26
32
2
12
10
A
14
17
25
13
24
15
27
28
29
31
30
16
19
18
20
10
3
10
22
20
23

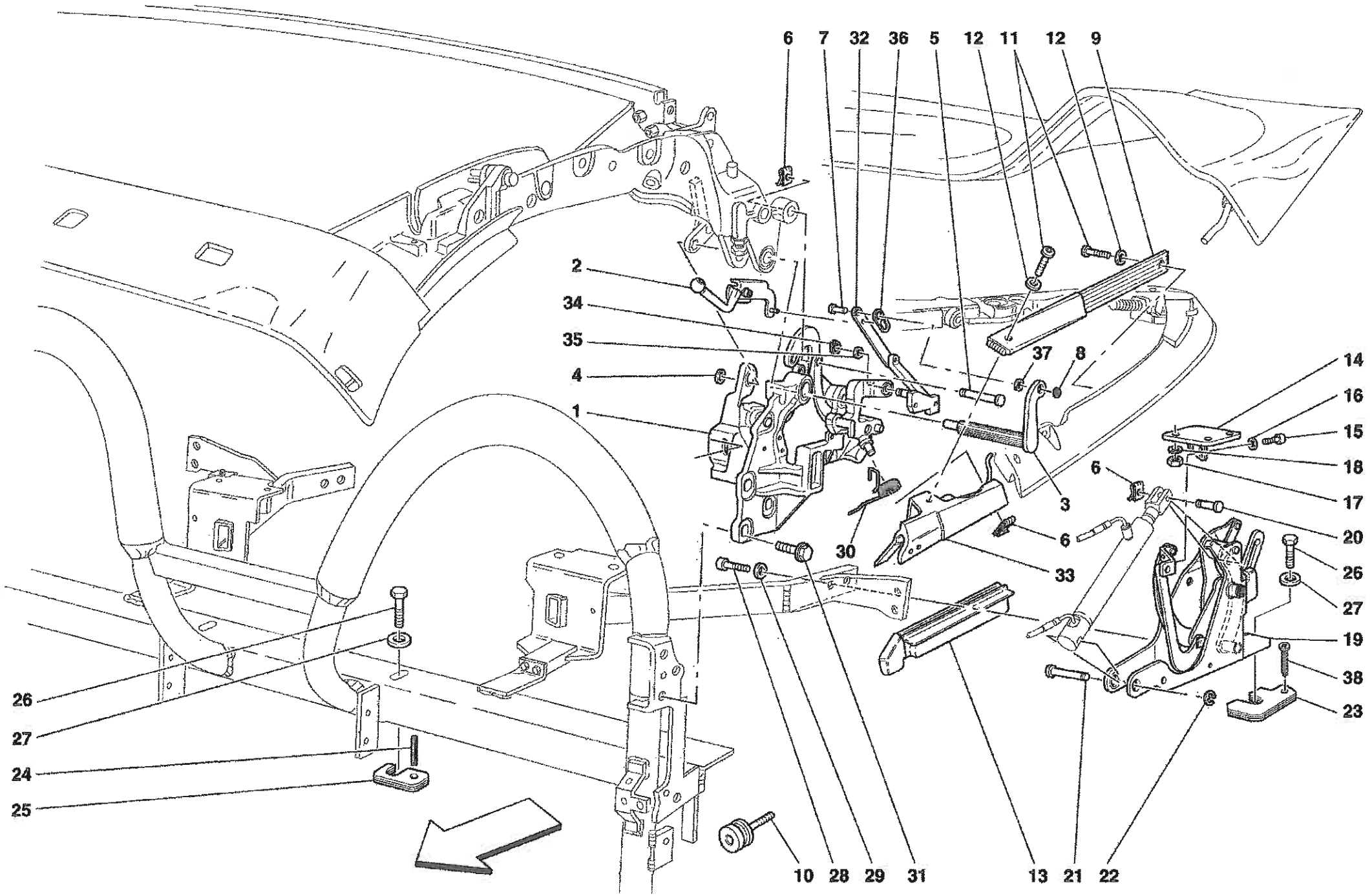
6
7
32
36
5
12
11
12
9
2
34
35
4
1
37
8
14
16
15
18
17
20
26
27
19
38
23
3
6
6
30
33
26
27
24
25
10
28
29
31
13
21
22

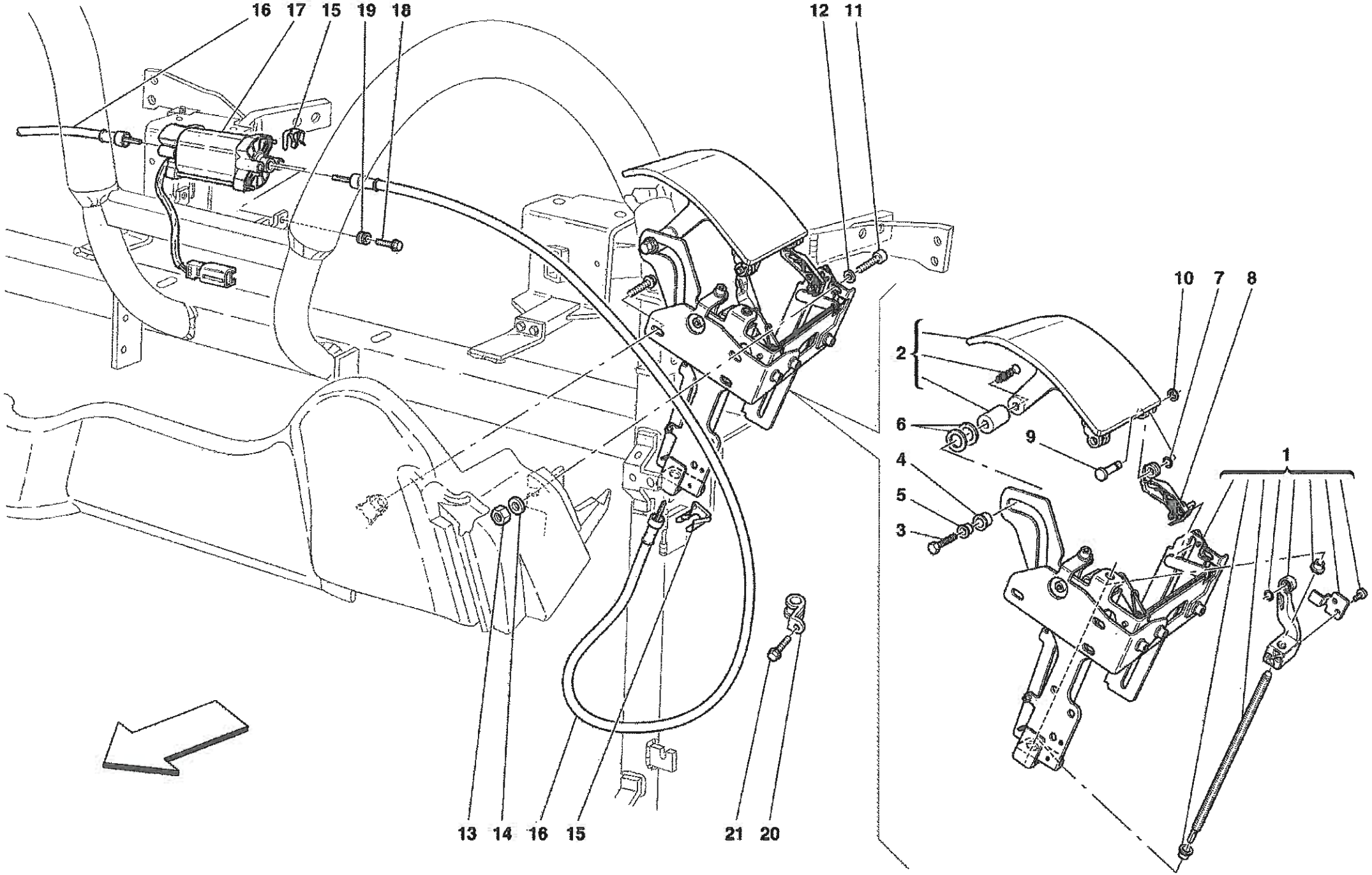
16
17
15
19
18
12
11
10
7
8
2
6
9
1
4
5
3
13
14
16
15
21
20

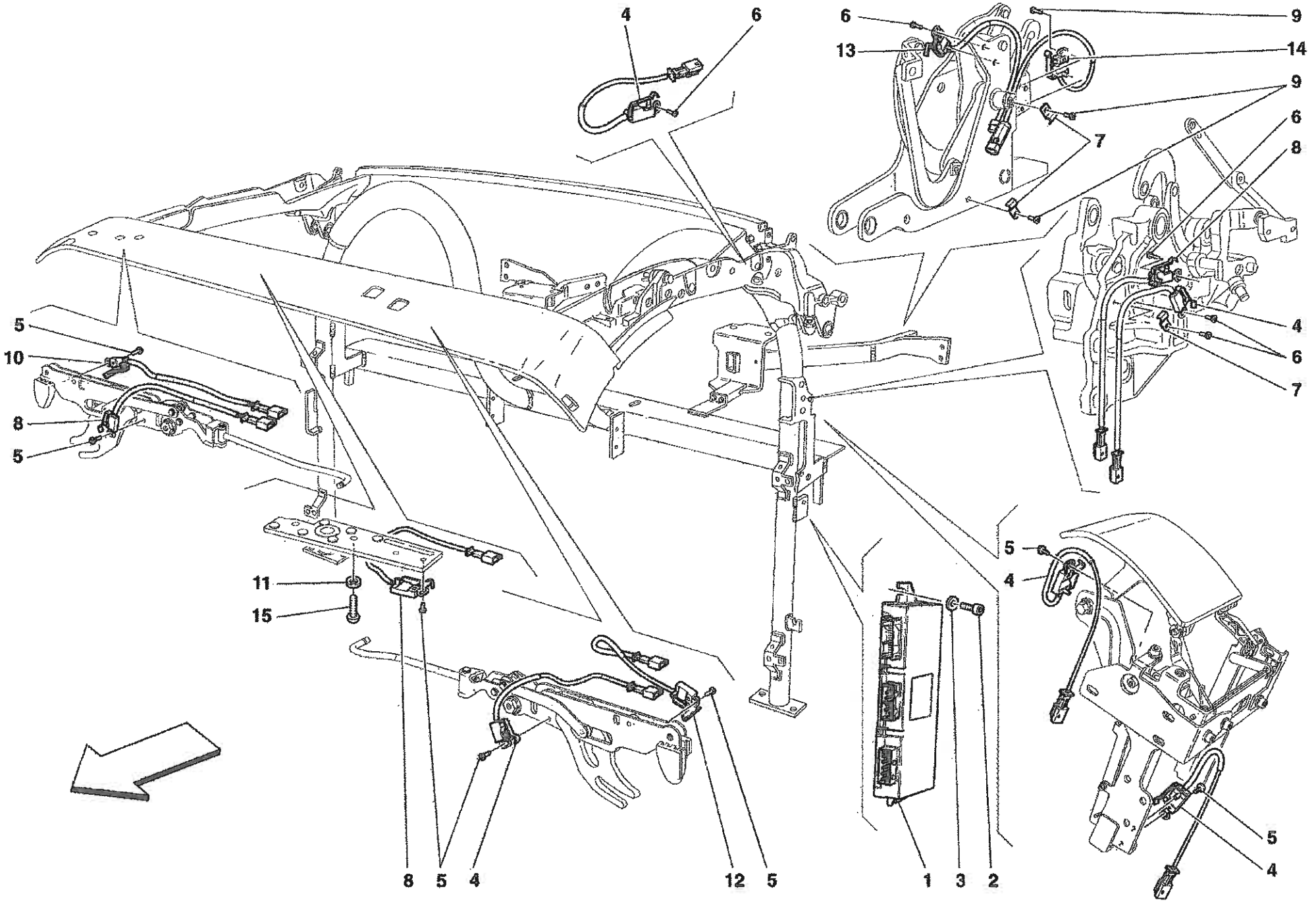
4
6
6
13
9
14
9
7
6
8
5
10
4
6
7
8
5
11
15
5
4
8
5
4
12
5
1
3
2
5
4
5
4

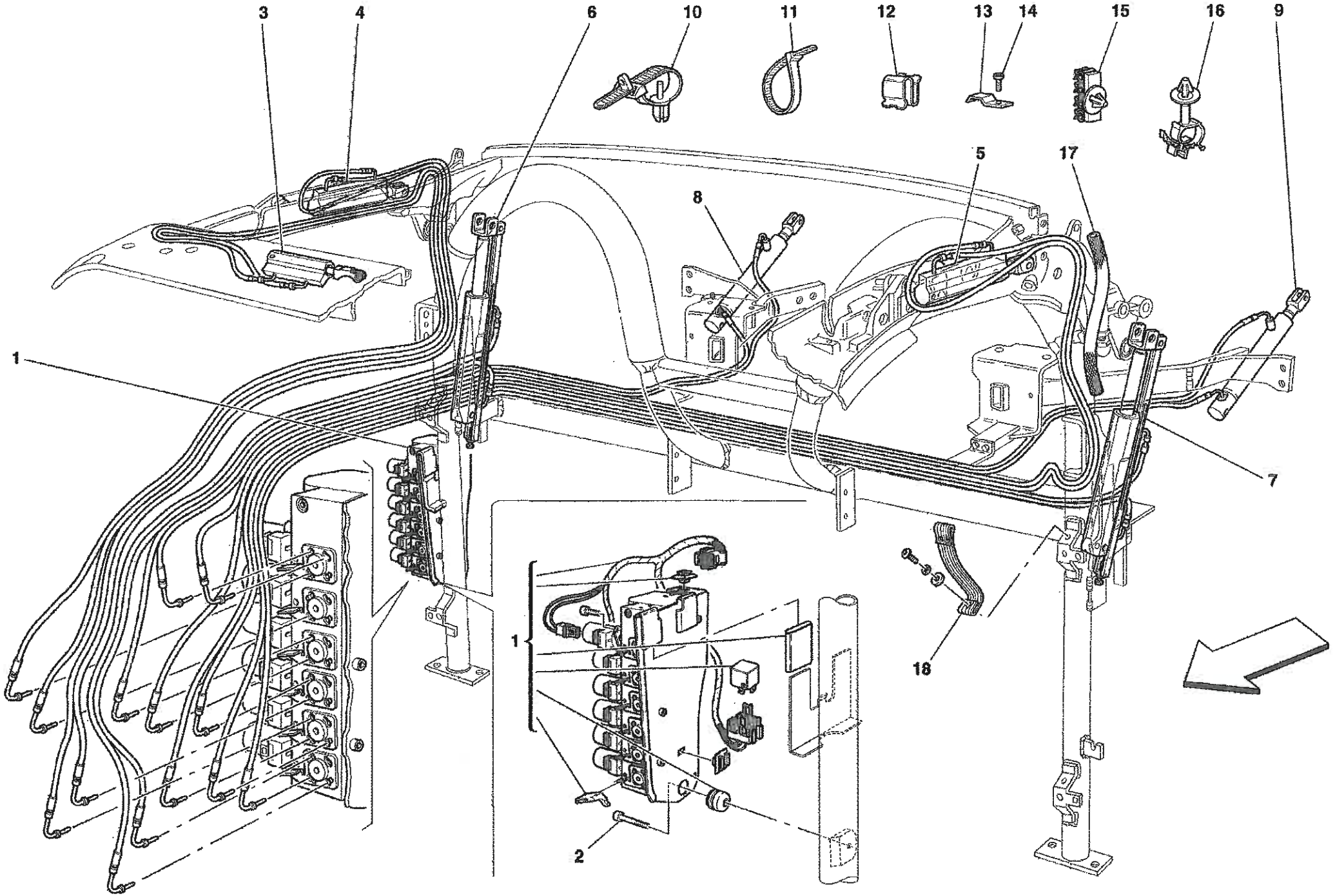
3
4
6
10
11
12
13
14
15
16
9
5
17
8
1
7
1
2
18

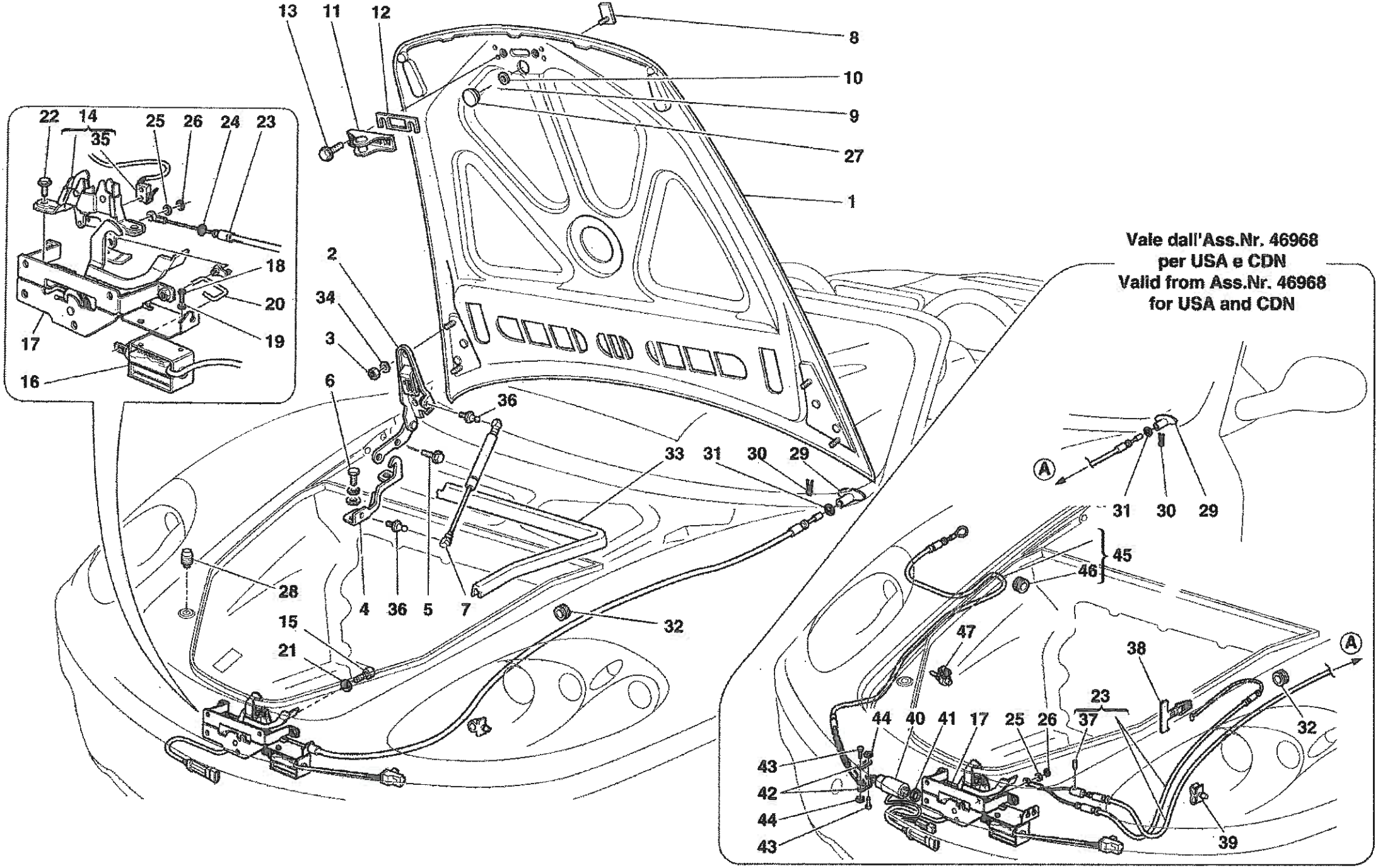
Vale dall'Ass.Nr. 46968
per USA e CDN
Valid from Ass.Nr. 46968
for USA and CDN

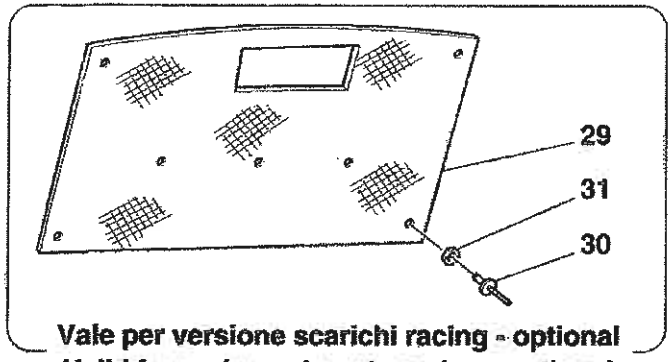

Vale per versione scarichi racing - optional
Valid for racing exhaust version - optional

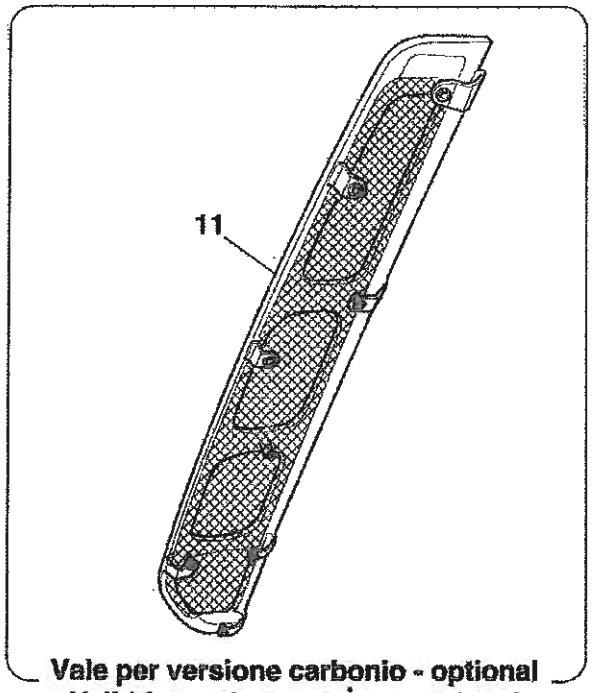

Vale per versione carbonio - optional
Valid for carbon version - optional

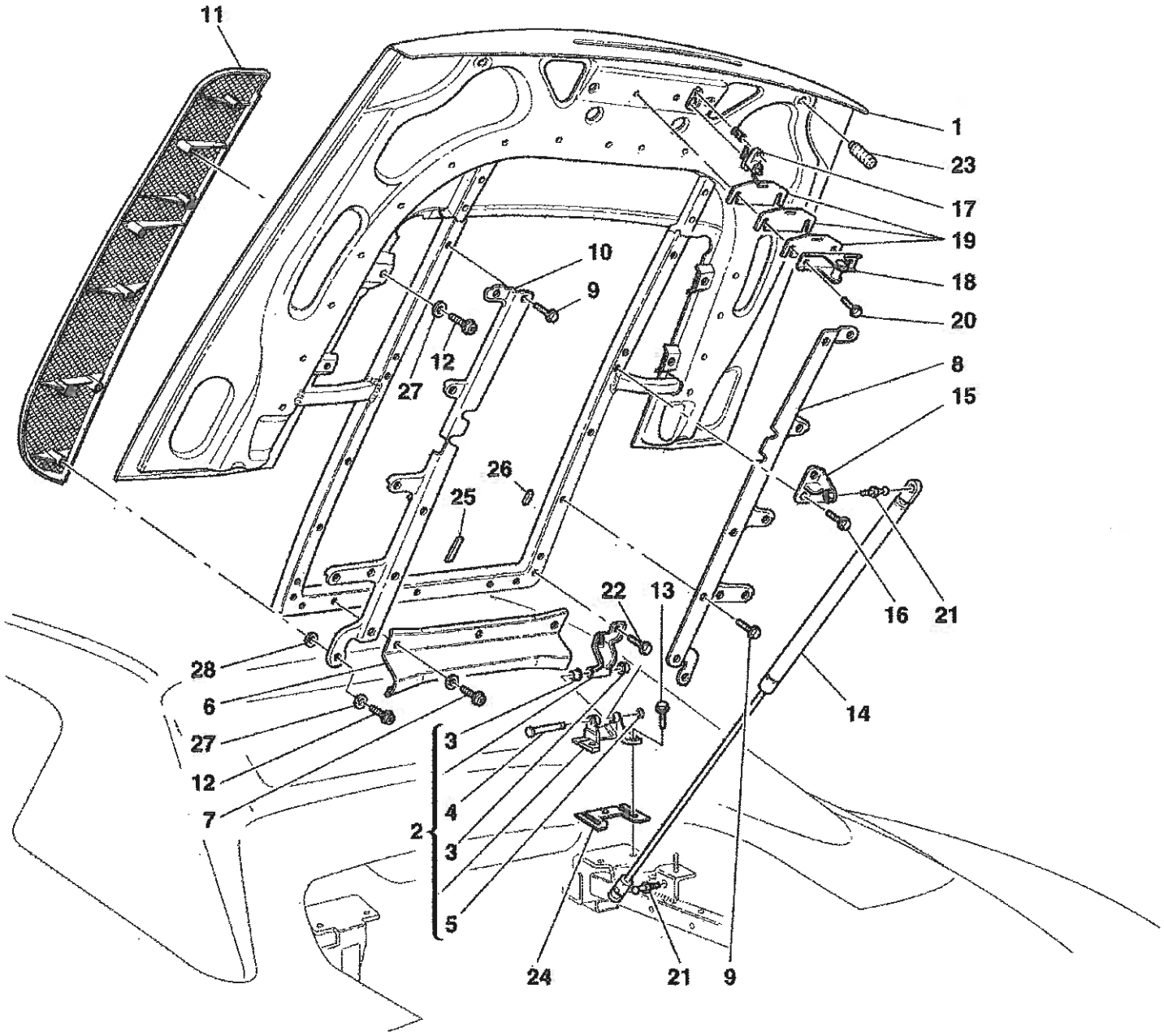

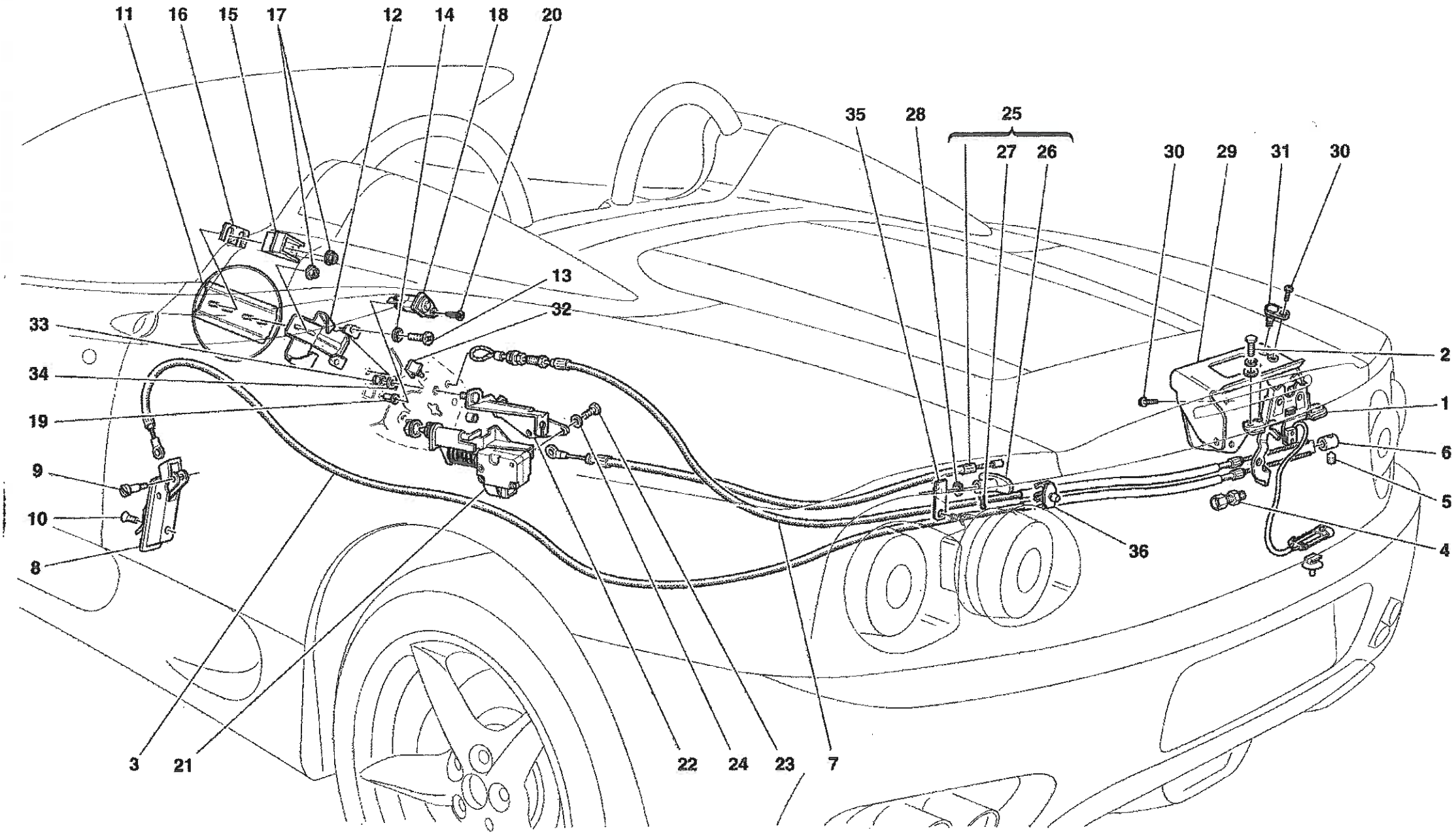
11
16
15
17
12
14
18
20
35
28
25
27
26
30
29
31
30
13
32
33
34
19
9
10
8
3
21
22
24
23
7
36
2
1
6
5
4

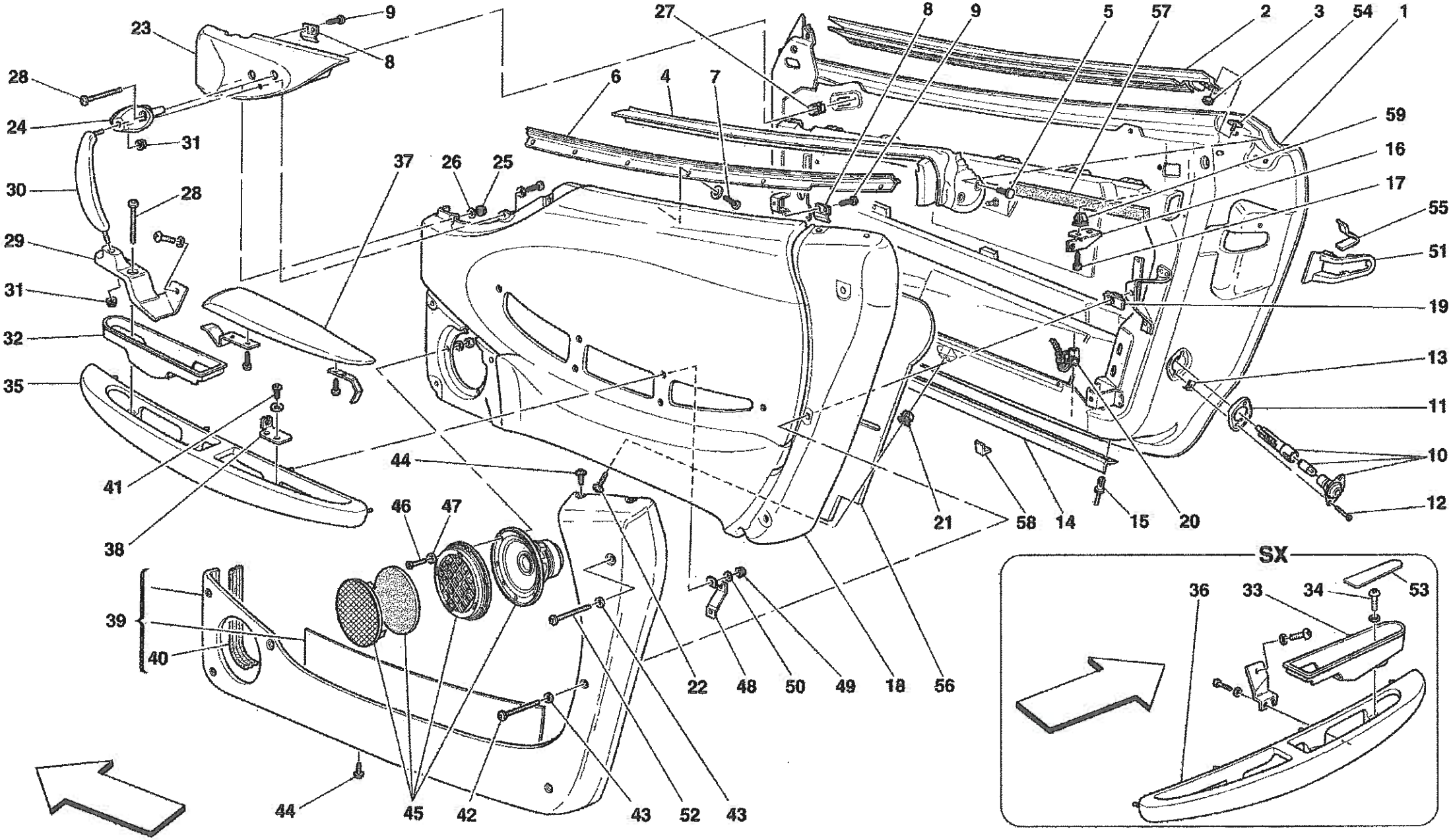
SX

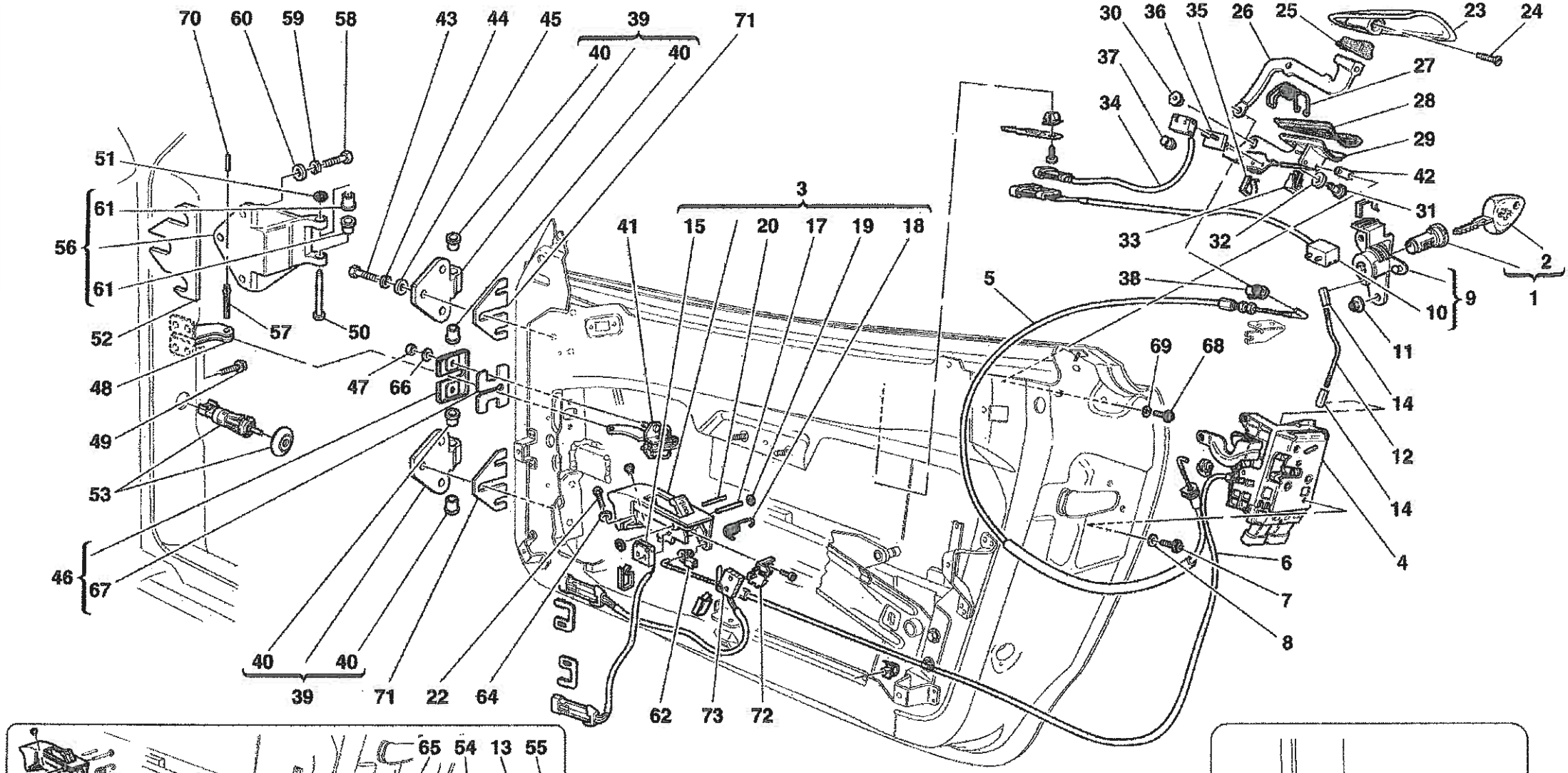

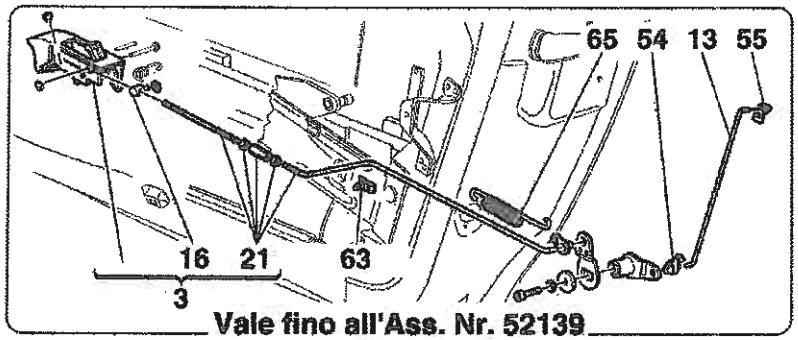

Vale fino all'Ass. Nr. 52139
Valid till Ass. Nr. 52139

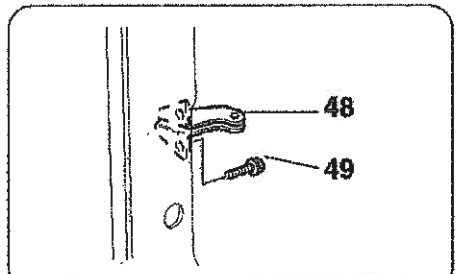

Vale fino alla vett. Nr.127704
Valid till car Nr 127704

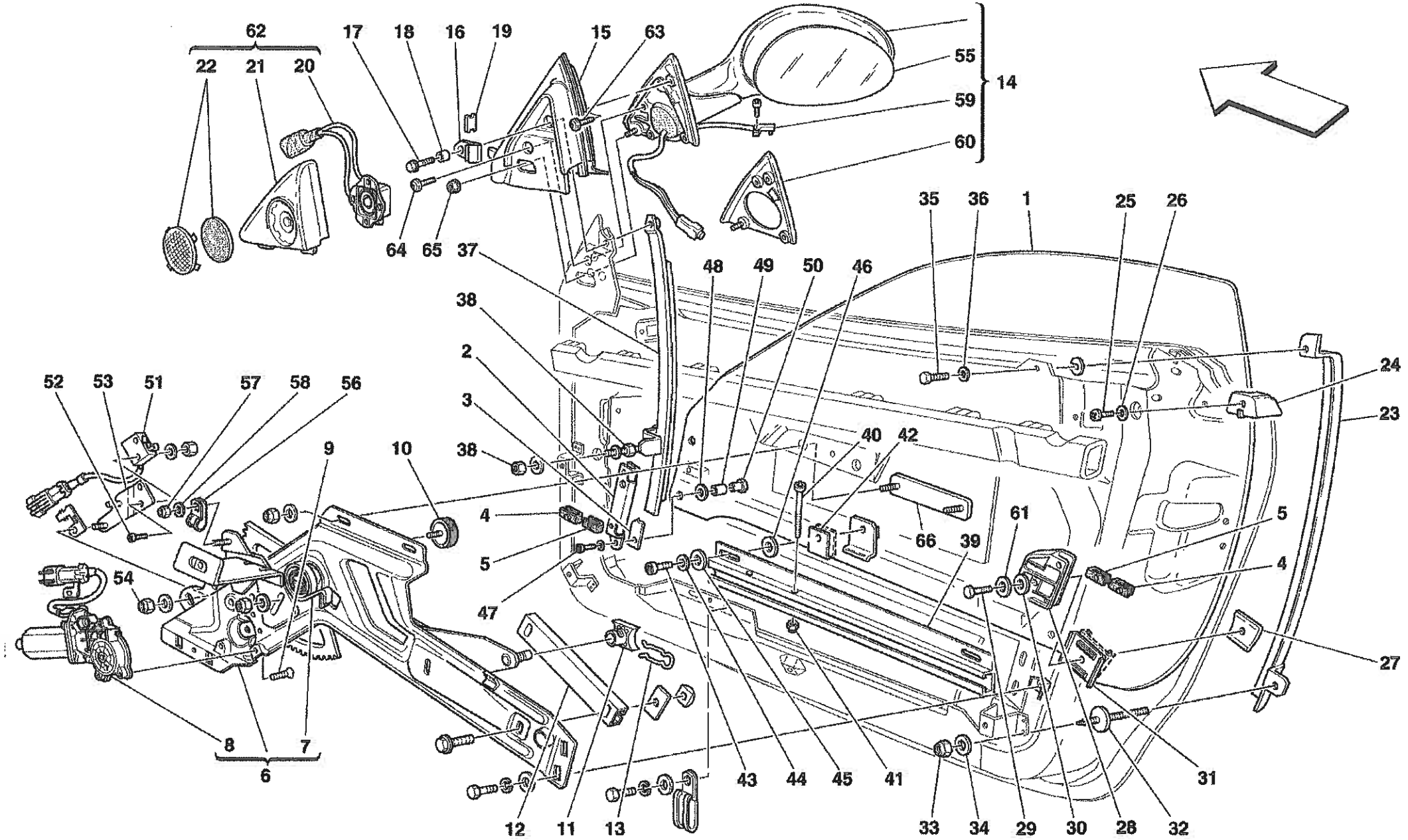
62
22
21
20
17
18
16
19
15
63
55
59
60
14
64
65
37
35
36
1
25
26
48
49
50
46
38
2
3
24
23
52
53
51
57
58
56
9
10
38
40
42
4
5
66
39
61
5
4
54
47
27
8
7
6
12
11
13
43
44
45
41
33
34
29
30
28
32
31

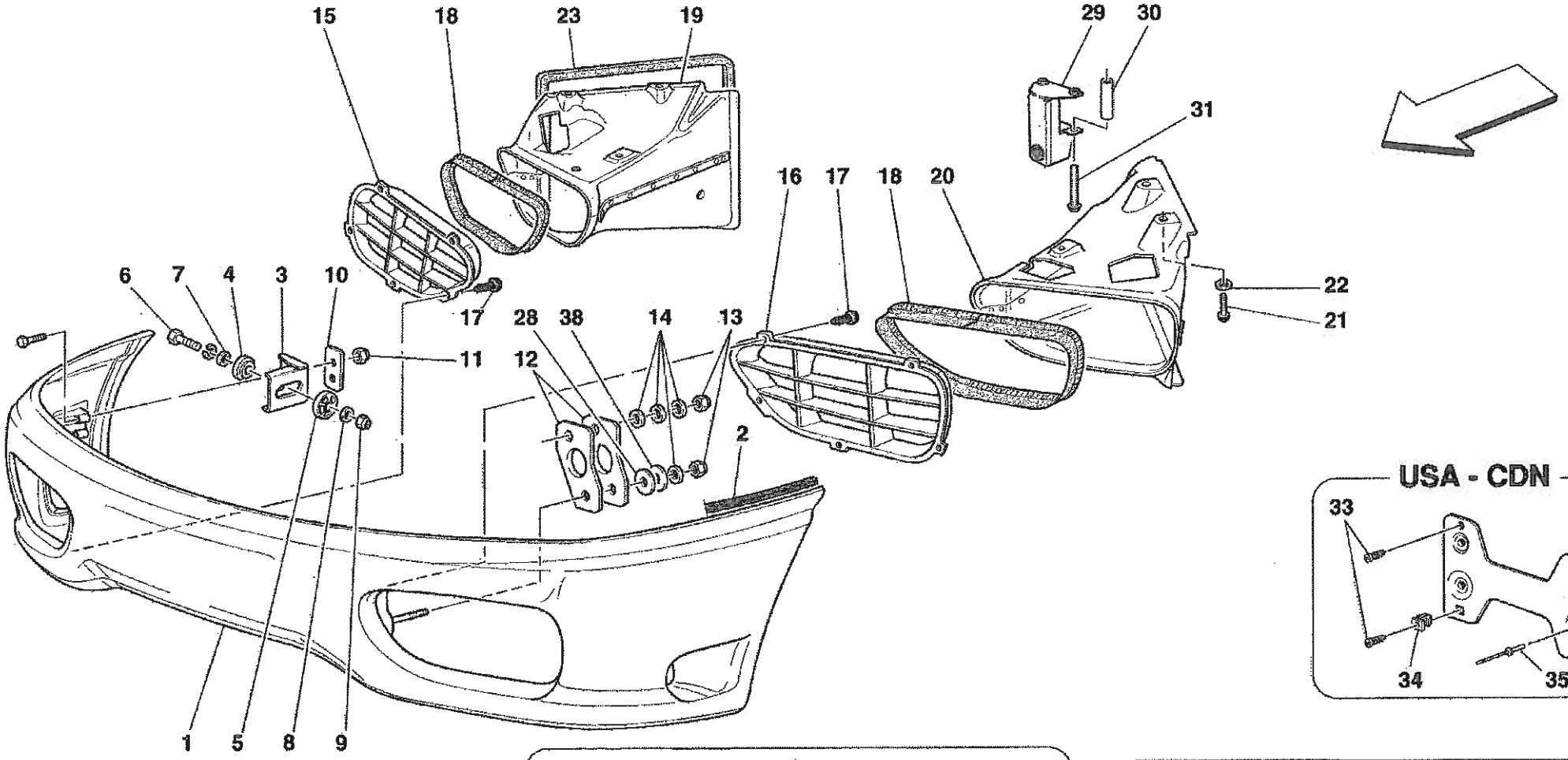
15
18
23
19
29
30
31
16
17
18
20
22
21
6
7
4
3
10
11
17
28
38
14
13
12
2
1
5
8
9

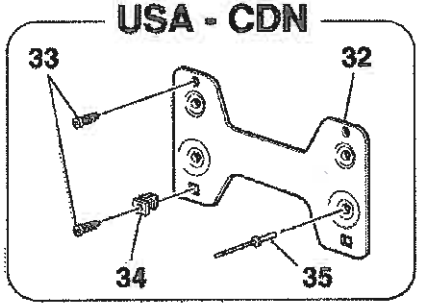
USA - CDN
33
32
34
35

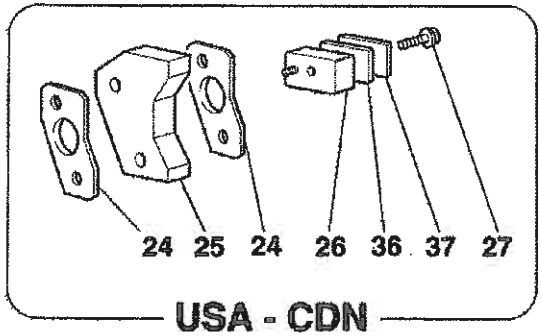
24
25
24
26
36
37
27
USA - CDN

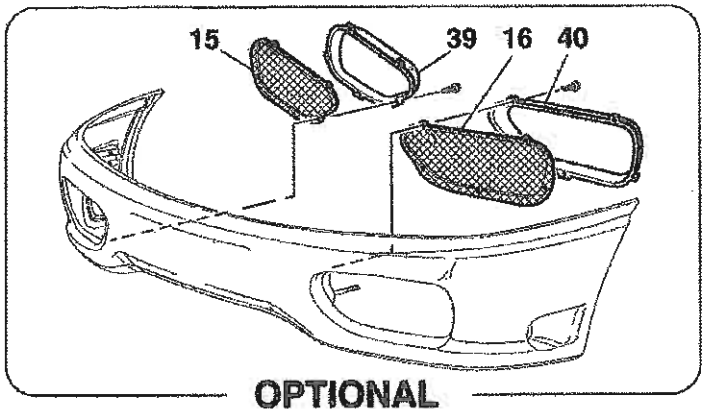
15
39
16
40
OPTIONAL

1
Versione lavafari
Lightwashers version

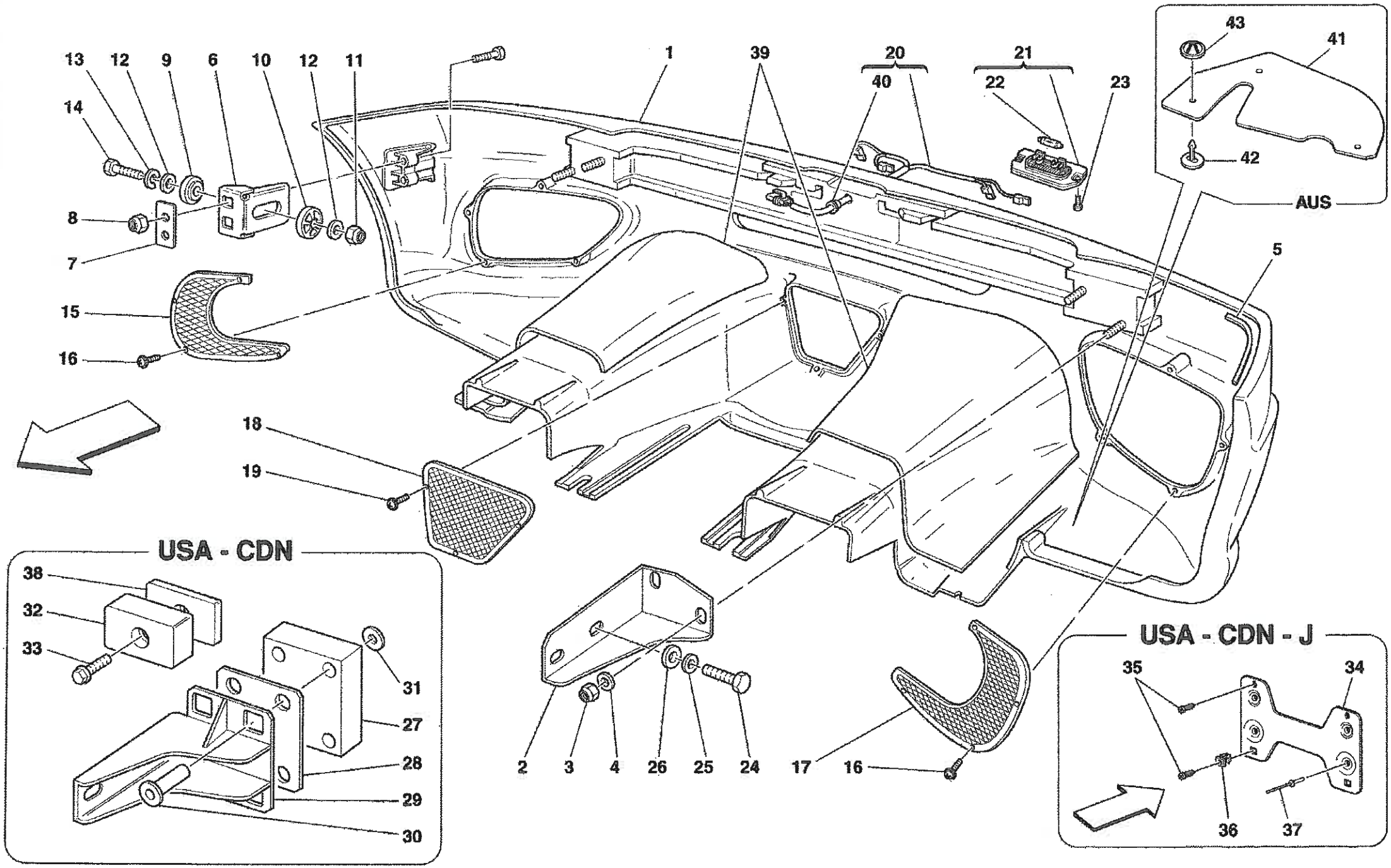
1
2
3
4
5
6
7
8
9
10
11
12
13
14
15
16
17
18
19
20
21
22
23
24
25
26
27
28
29
30
31
32
33
34
35
36
37
38
39
40
41
42
43
AUS
USA - CDN
USA - CDN - J

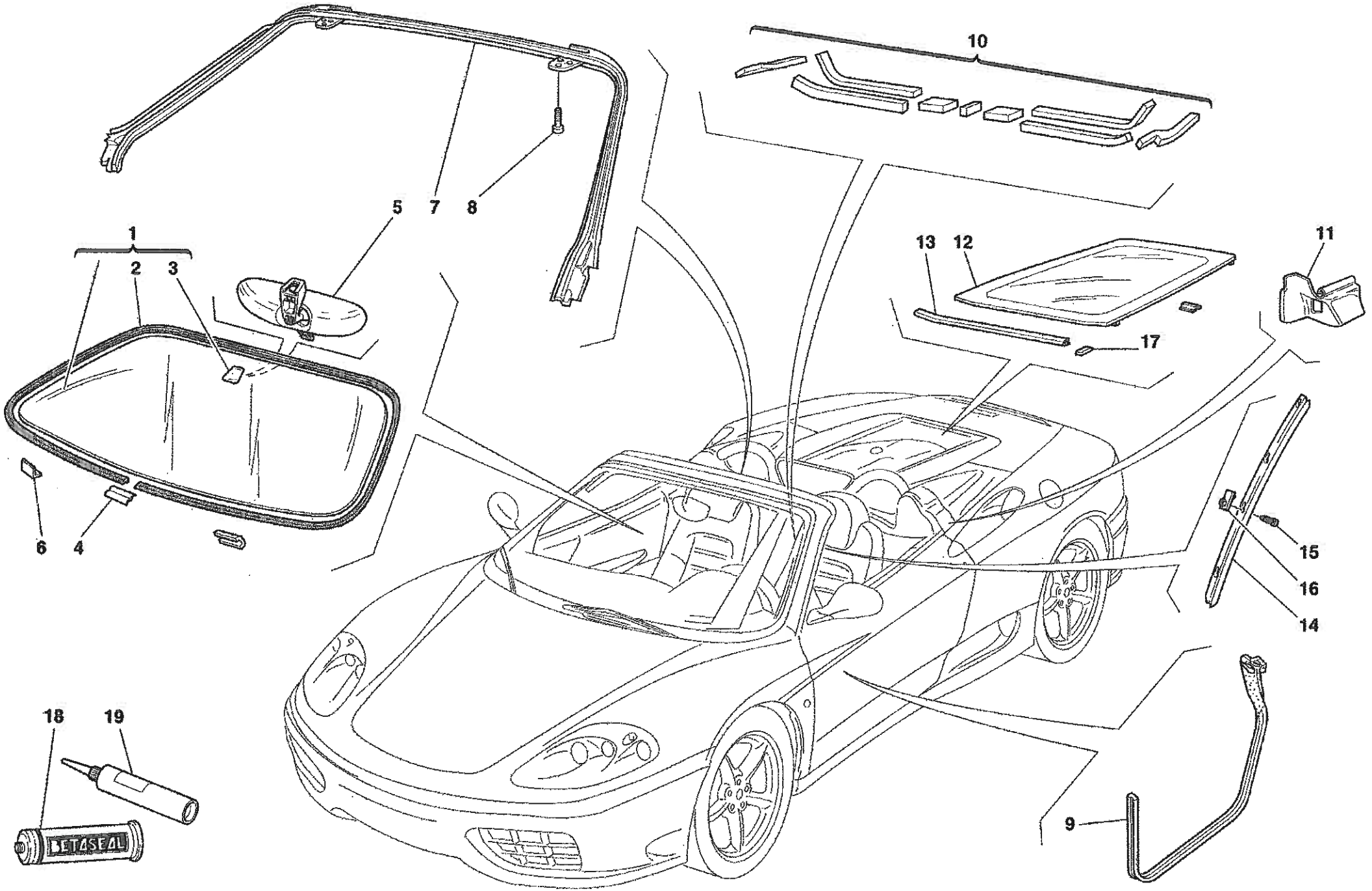
1
2
3
4
5
6
7
8
9
10
11
12
13
14
15
16
17
18
19
BETASEAL

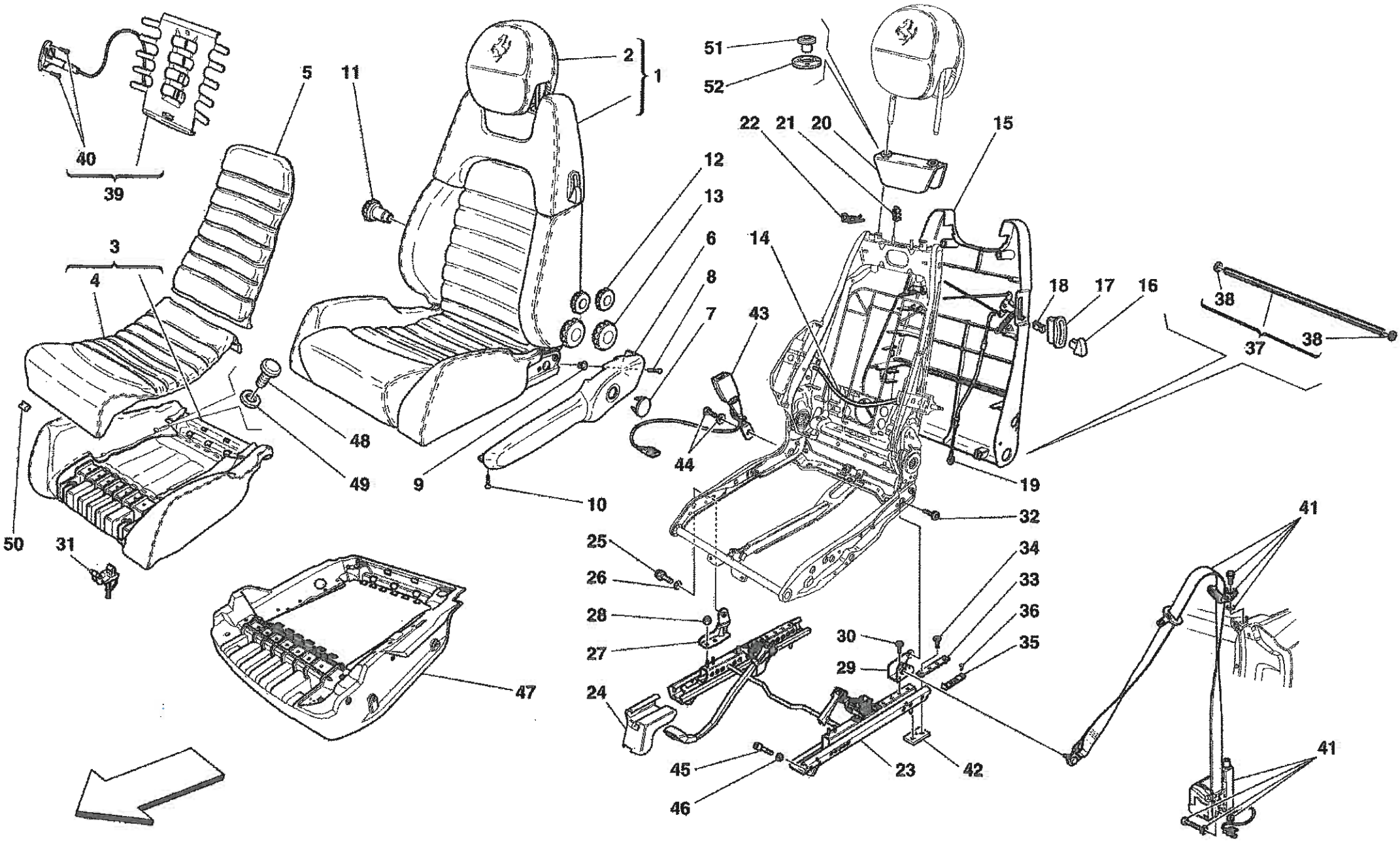
40
39
5
11
2
1
51
52
22
21
20
15
12
13
6
8
7
14
43
18
17
16
38
37
38
3
4
48
49
9
10
44
19
50
31
32
25
26
28
27
24
30
29
34
33
36
35
41
47
45
46
23
42
41

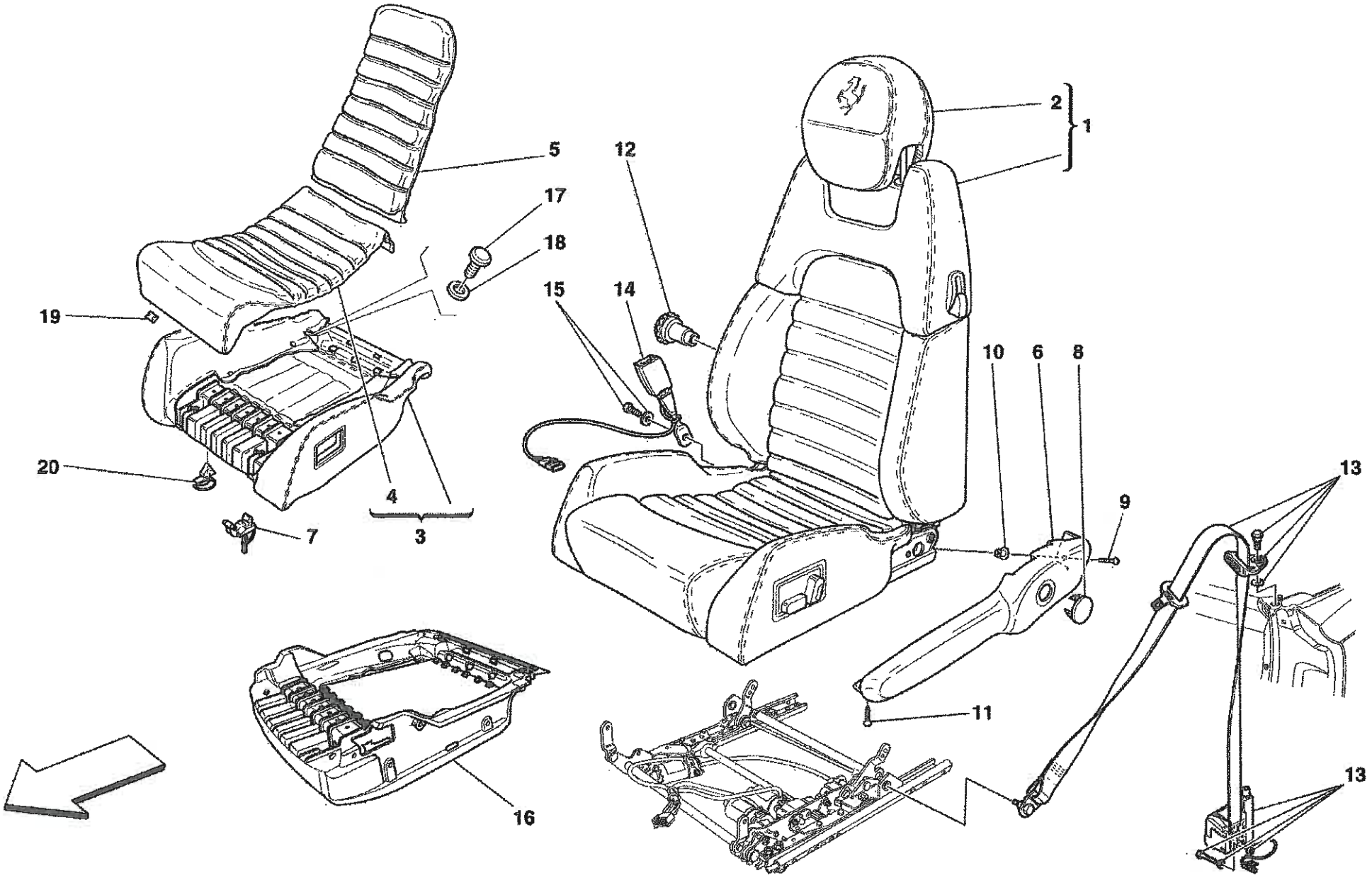
1
2
3
4
5
6
7
8
9
10
11
12
13
13
14
15
16
17
18
19
20

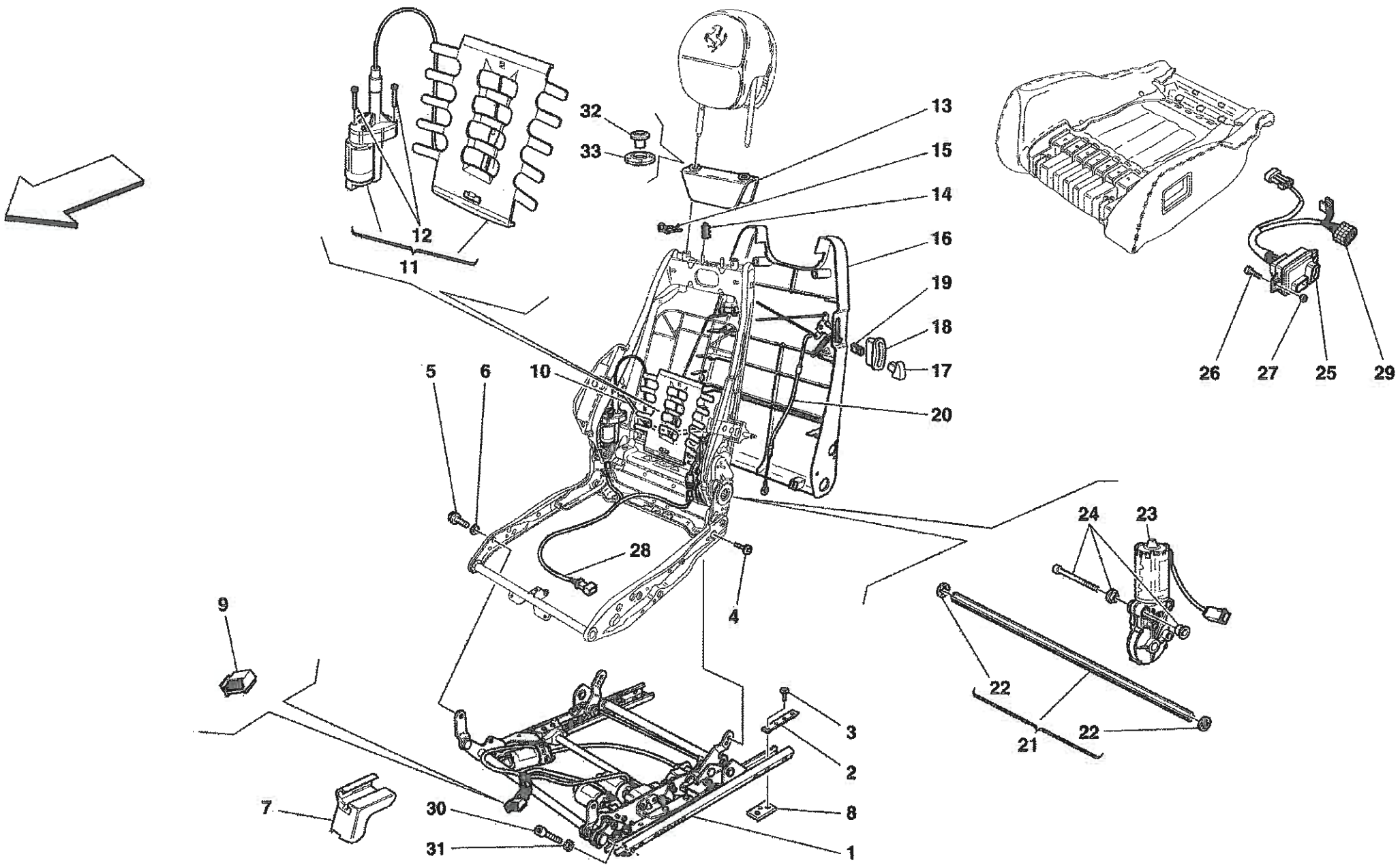
32
33
13
15
14
16
19
18
17
20
12
11
5
6
10
28
4
9
7
30
31
3
2
8
1
24
23
22
21
22
26
27
25
29

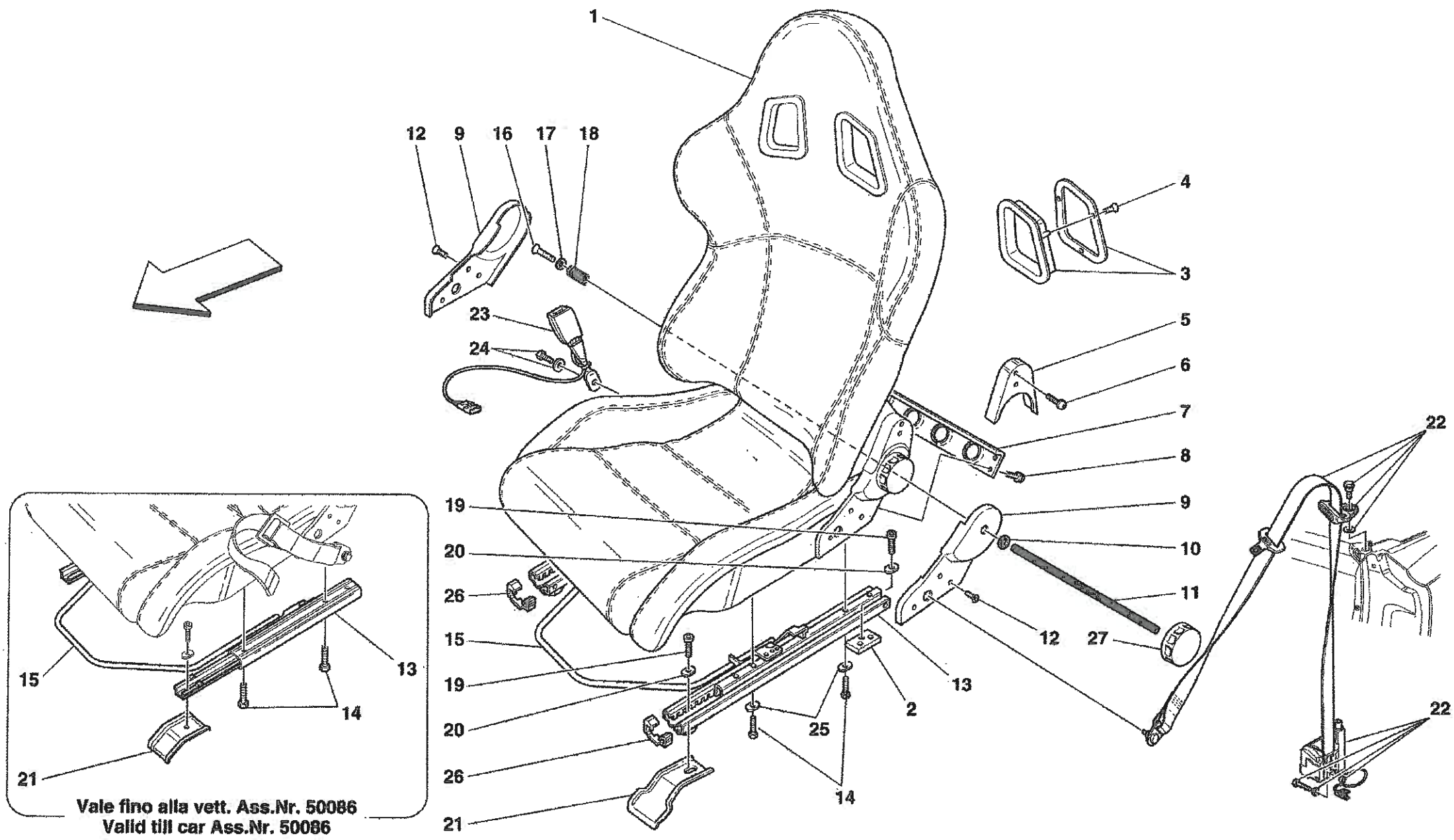
1
12
9
16
17
18
4
3
23
24
5
6
7
8
9
10
11
12
27
22
19
20
26
15
19
20
26
21
13
2
25
14
13
15
14
21
Vale fino alla vett. Ass.Nr. 50086
Valid till car Ass.Nr. 50086

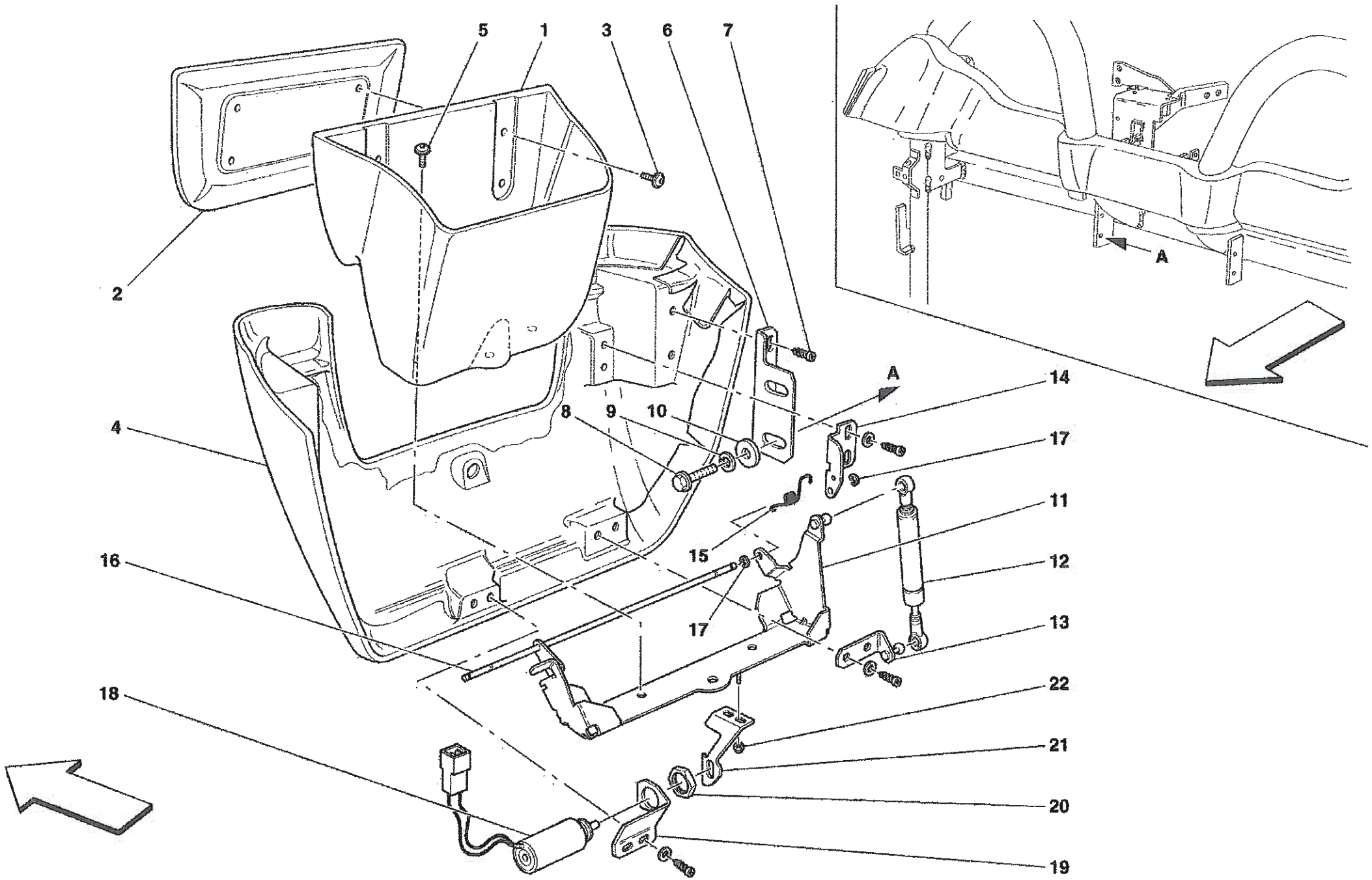
5
1
3
6
7
2
A
14
4
8
9
10
17
11
15
16
12
17
13
18
22
21
20
19
A

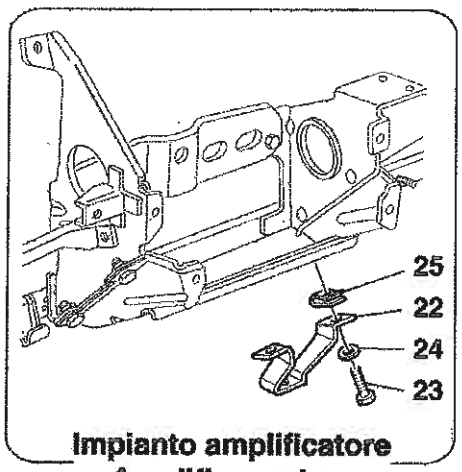

Impianto amplificatore
Amplifier system

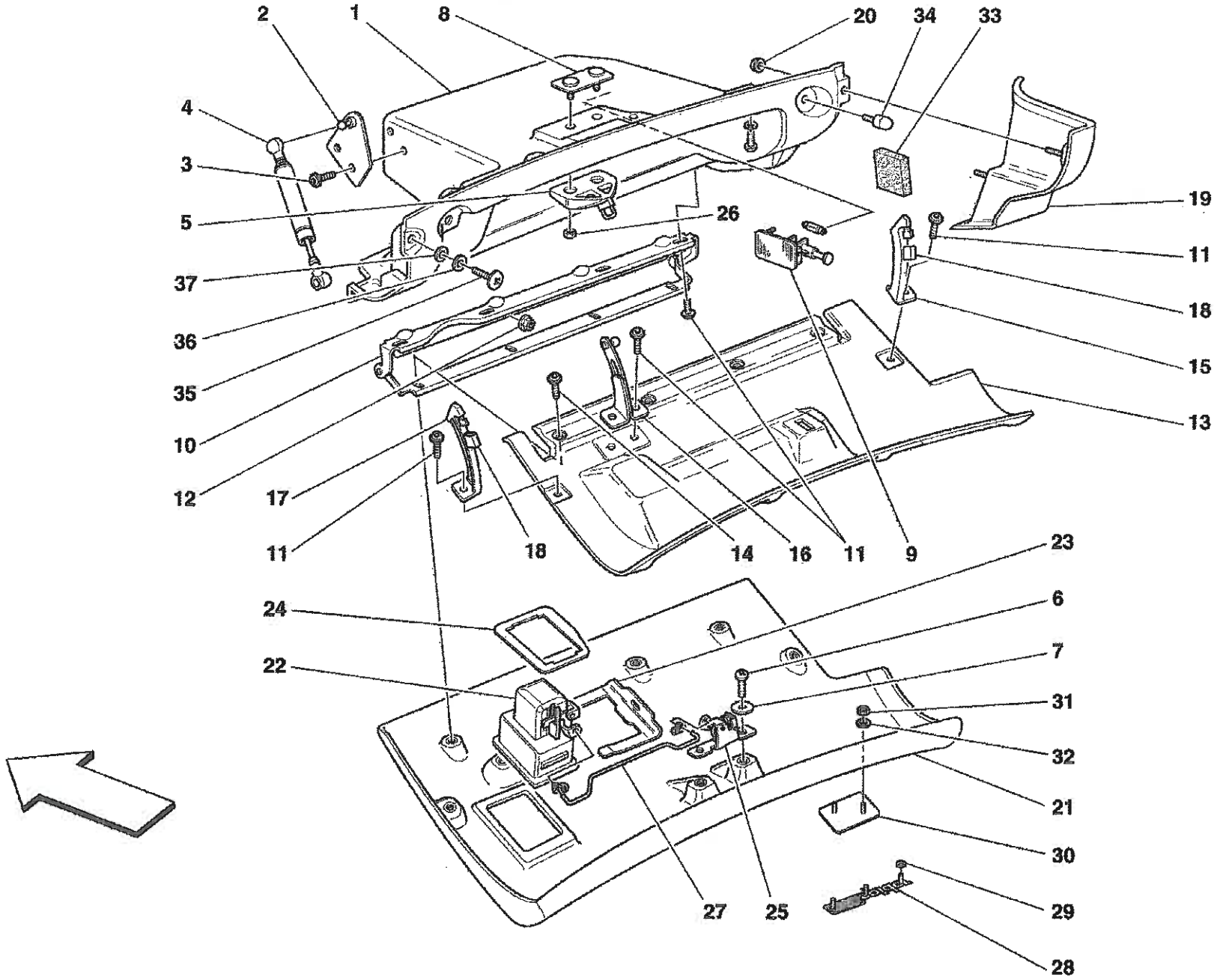
2
1
8
20
34
33
4
3
5
26
19
11
37
18
36
15
35
13
10
12
17
11
18
14
16
11
9
23
24
6
22
7
31
32
21
30
27
25
29
28

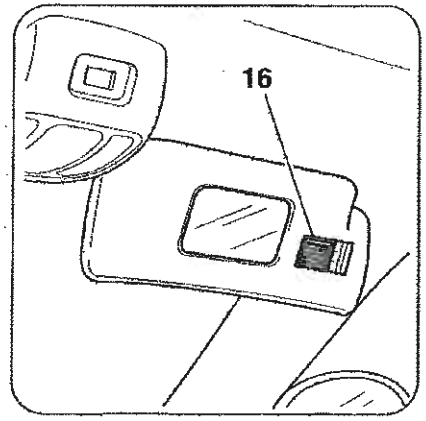
16

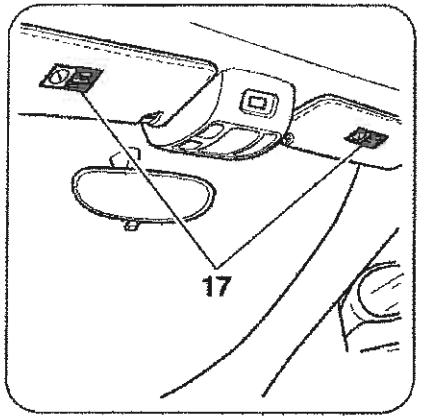
17

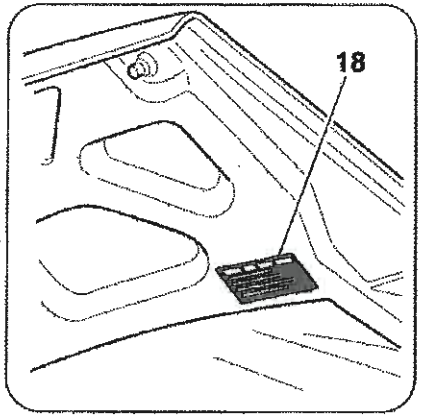
18

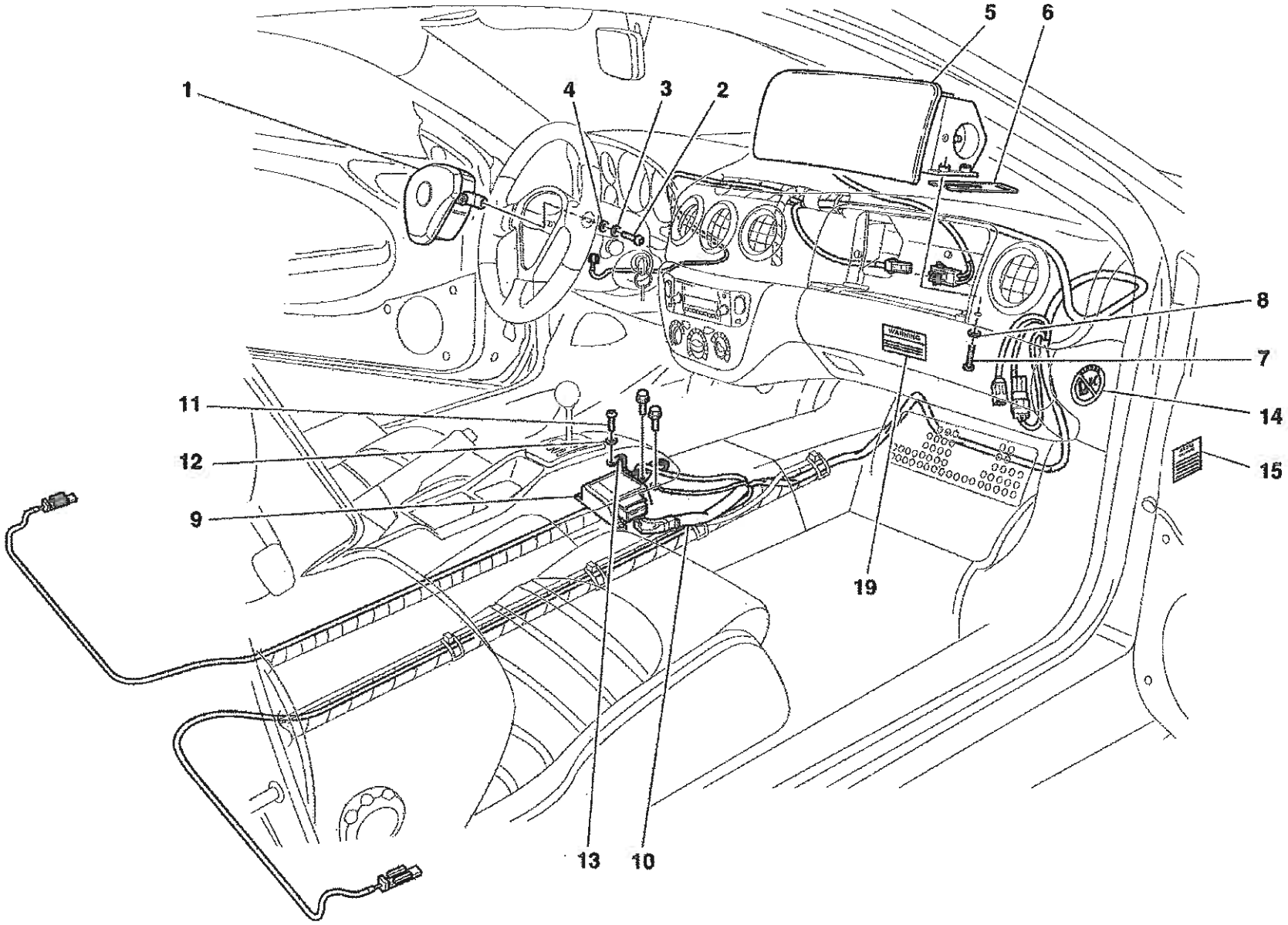
1
2
3
4
5
6
7
8
9
10
11
12
13
14
15
19
WARNING

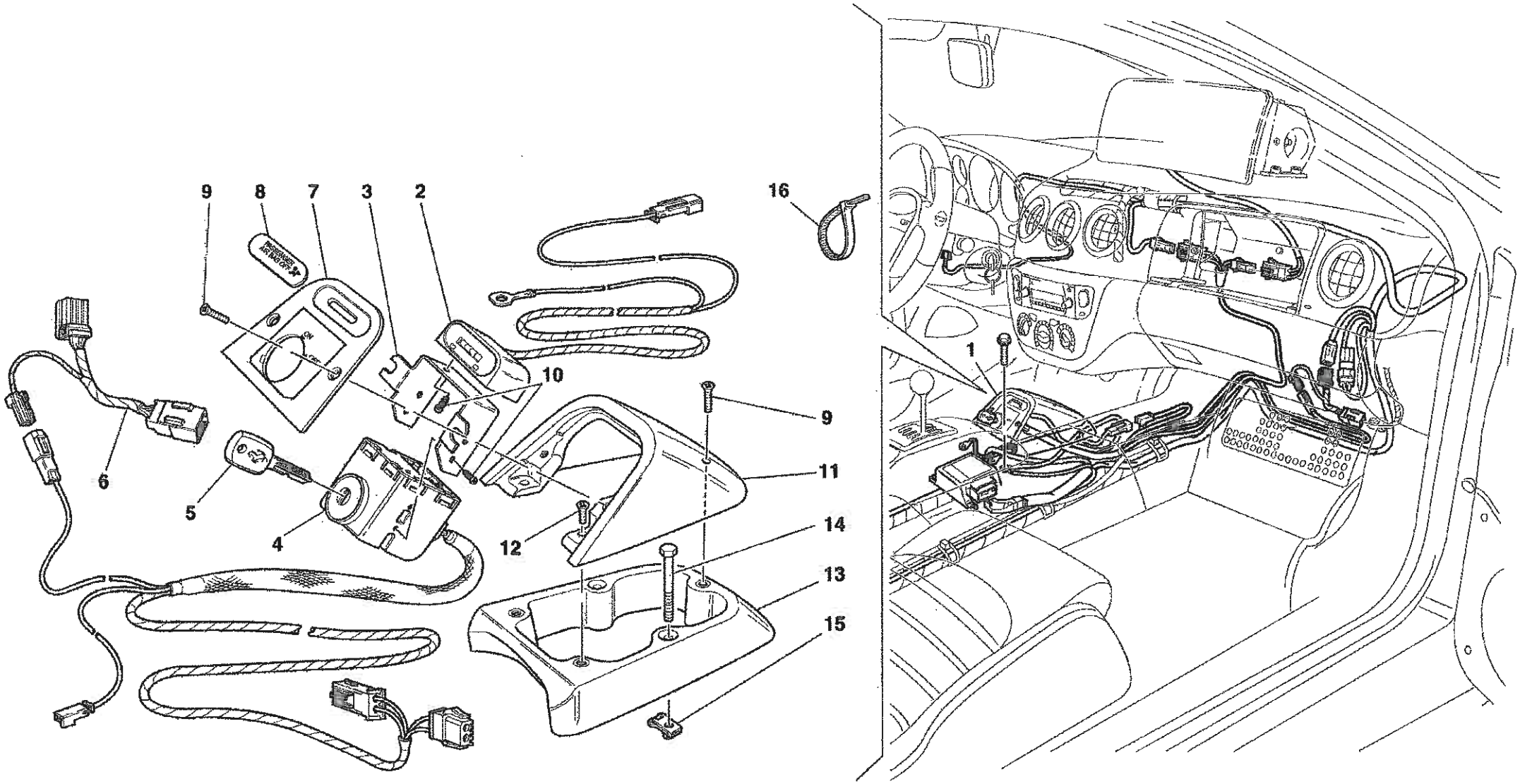
9
8
7
3
2
16
10
9
6
11
5
4
12
14
13
15
1

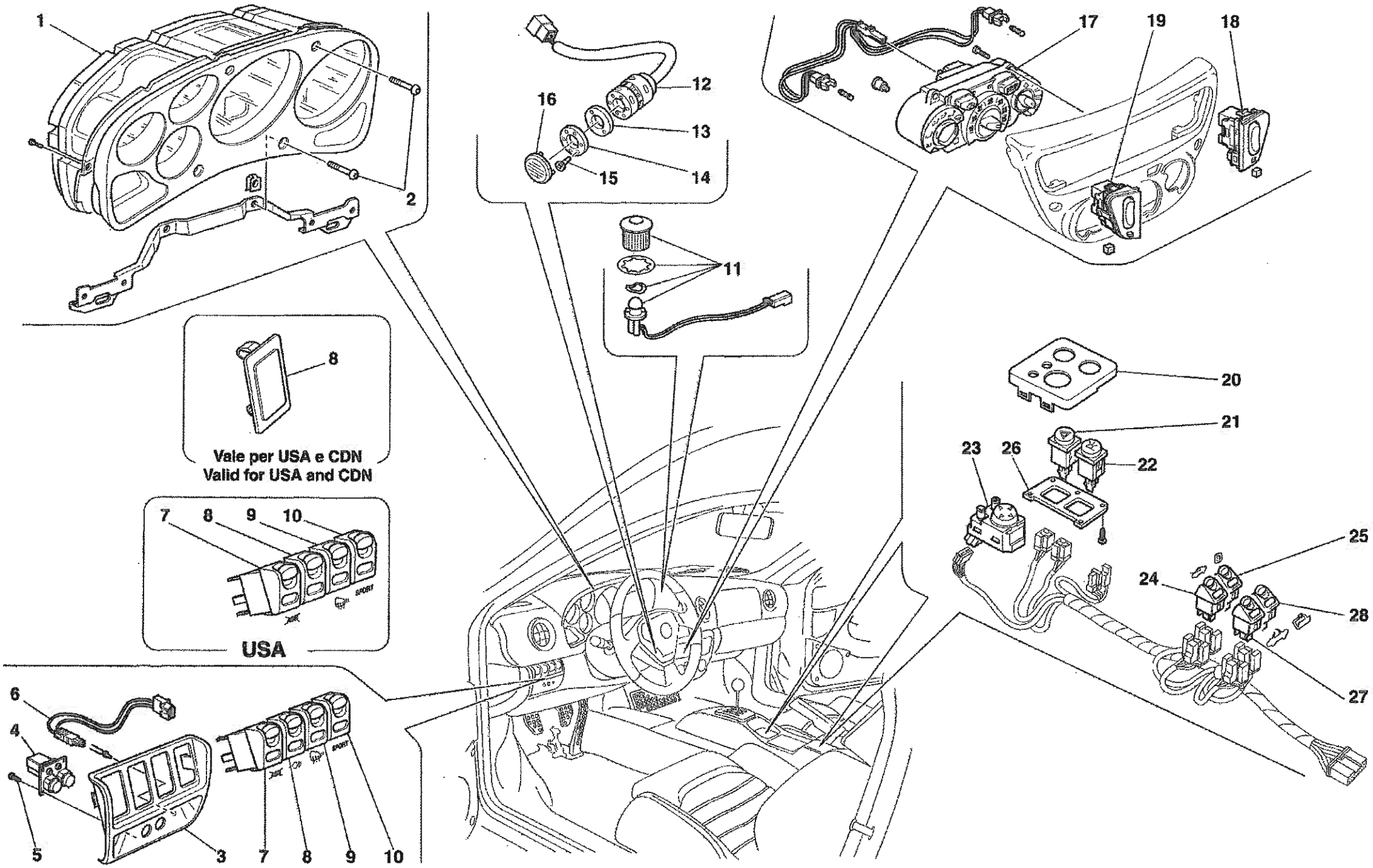
1
2
8
Vale per USA e CDN
Valid for USA and CDN
7
8
9
10
USA
6
4
5
3
7
8
9
10
12
16
13
15
14
11
17
19
18
20
21
23
26
22
25
24
28
27

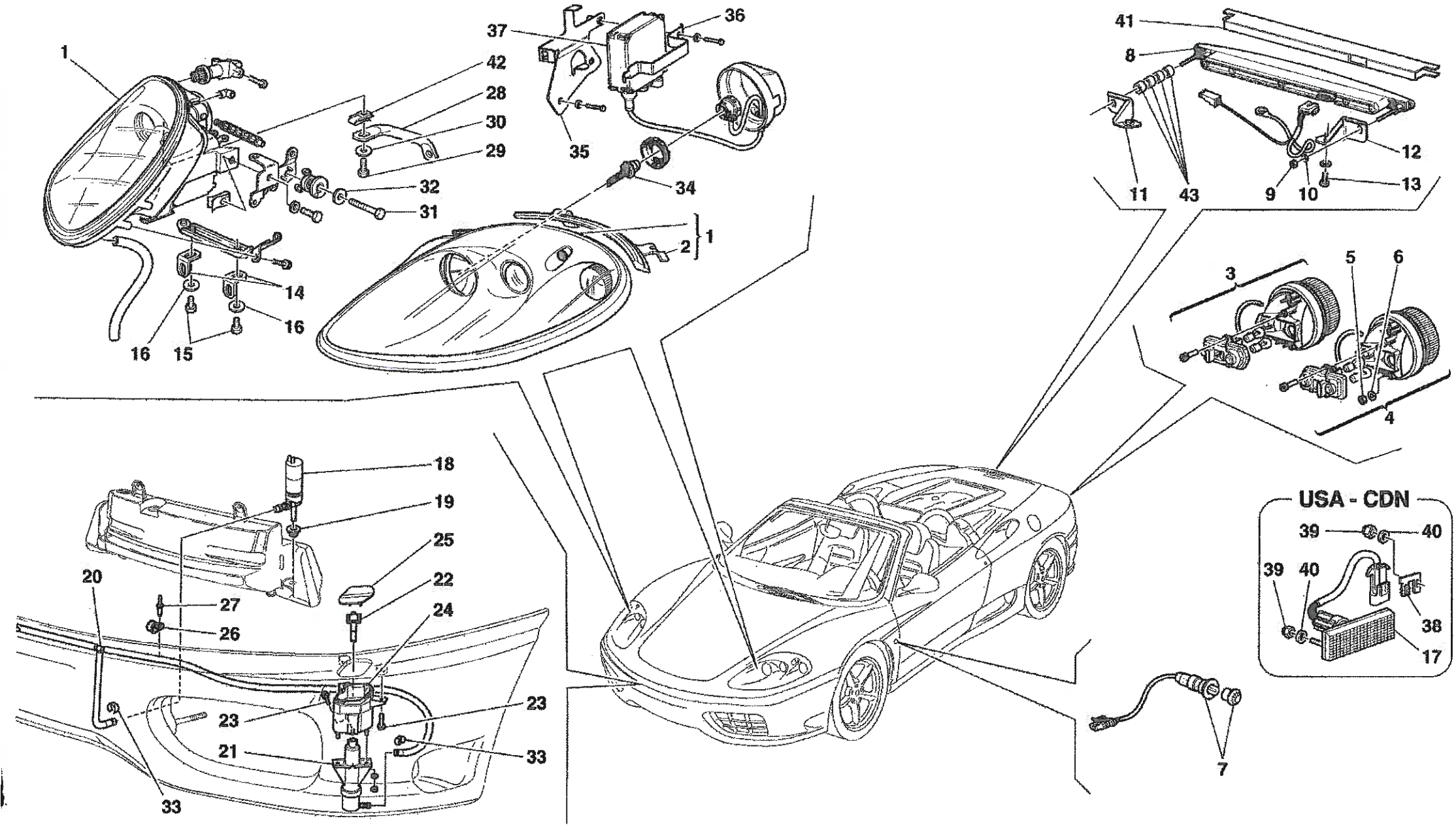
1
2
3
4
5
6
7
8
9
10
11
12
13
14
15
16
16
18
19
20
21
22
23
23
24
25
26
27
28
29
30
31
32
33
33
34
35
36
37
41
42
43
USA - CDN
39
40
39
40
38
17

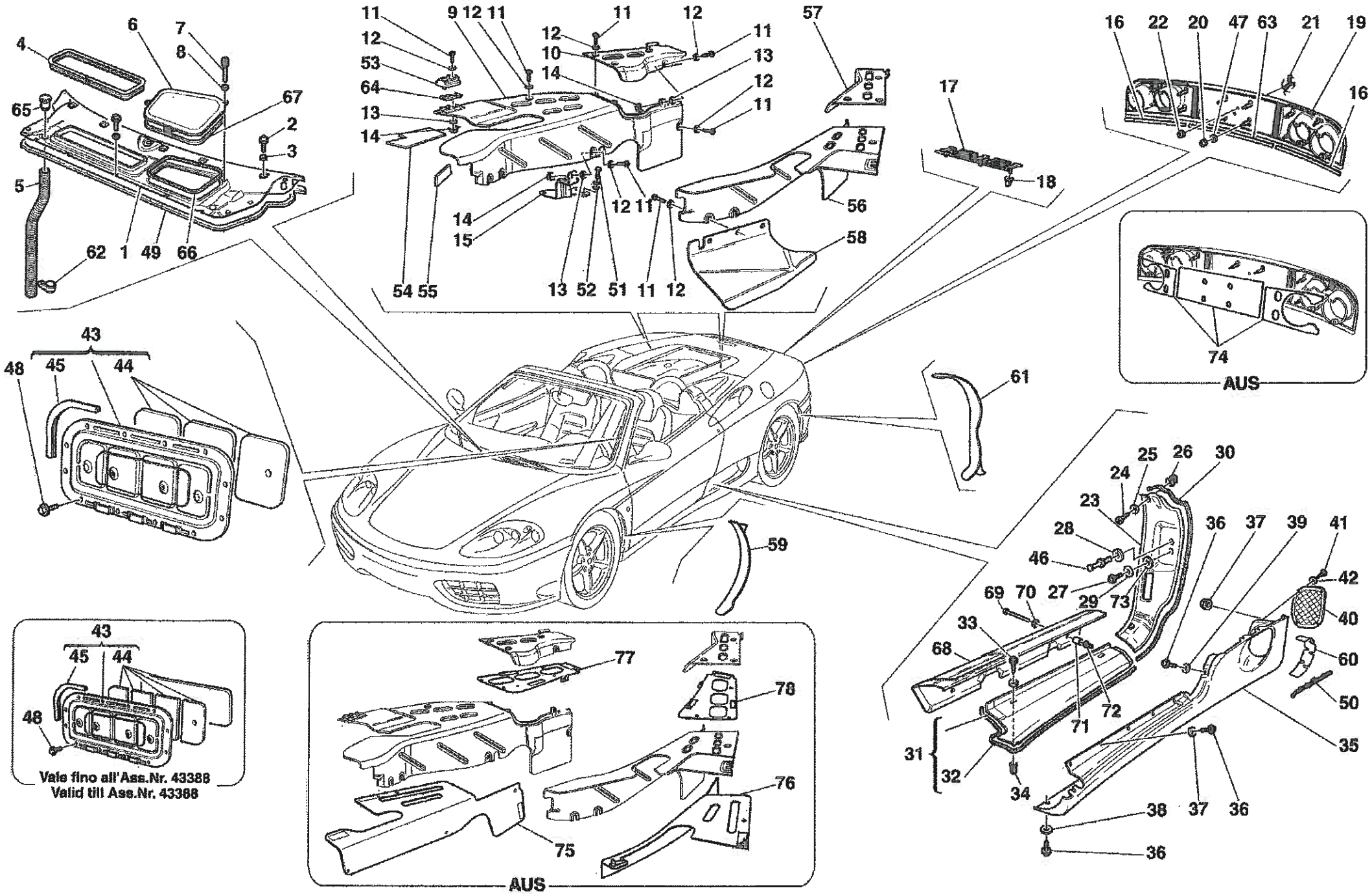

Vale fino all'Ass.Nr. 43388
Valid till Ass.Nr. 43388
AUS
AUS

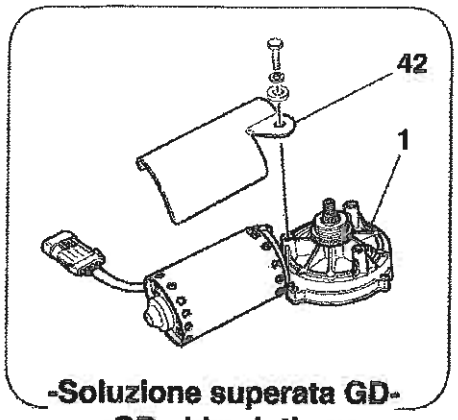

-Soluzione superata GD-
-GD old solution-

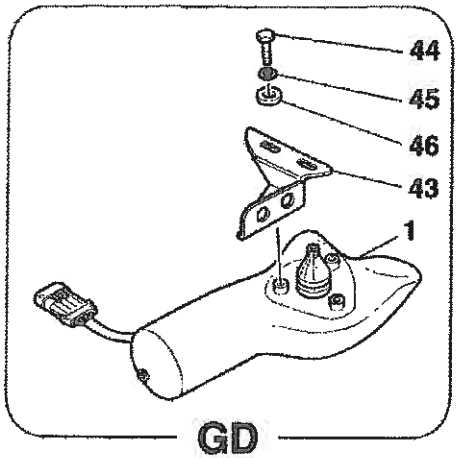

GD

-Versione lavafari-
-Headlight washer version-

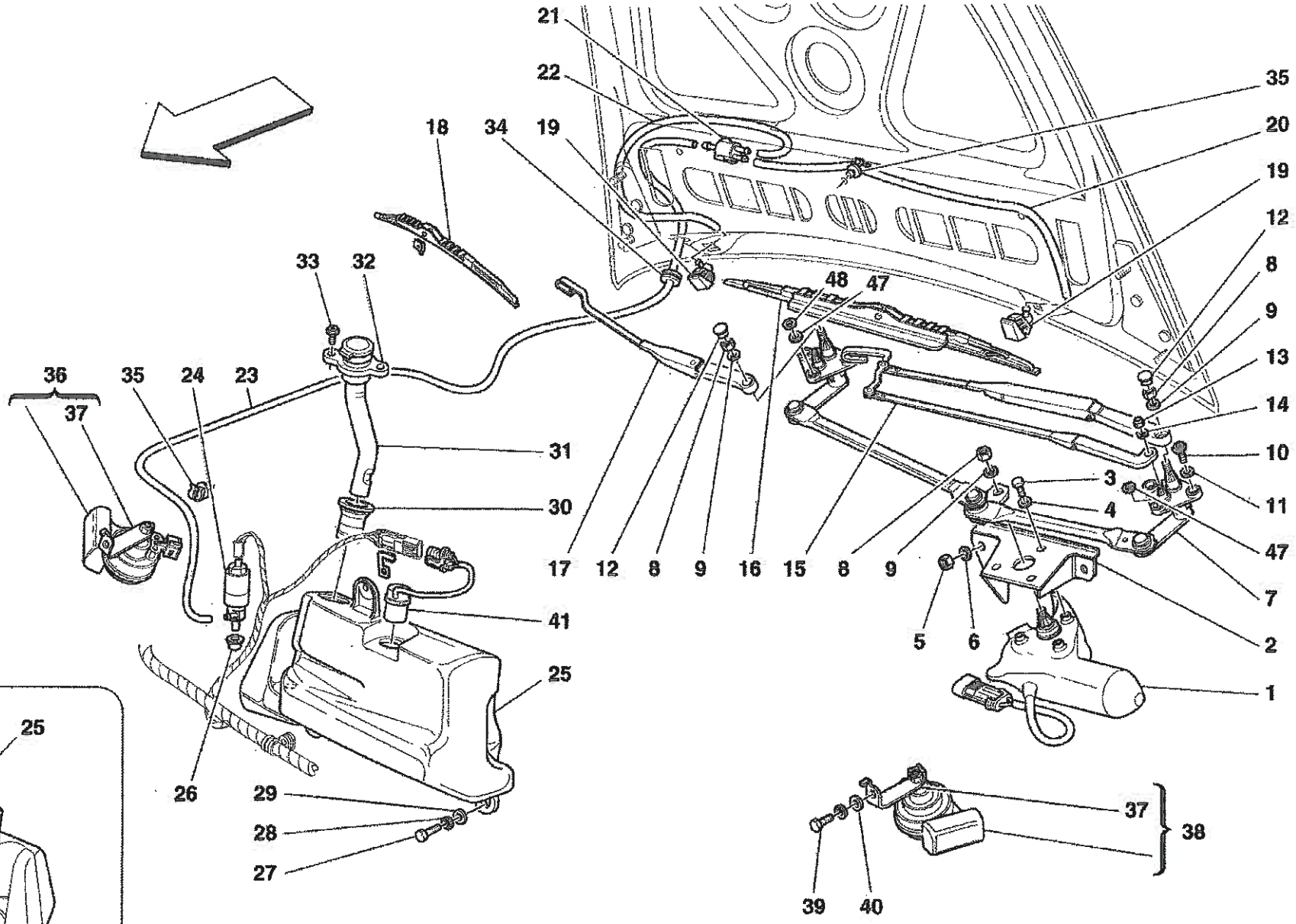

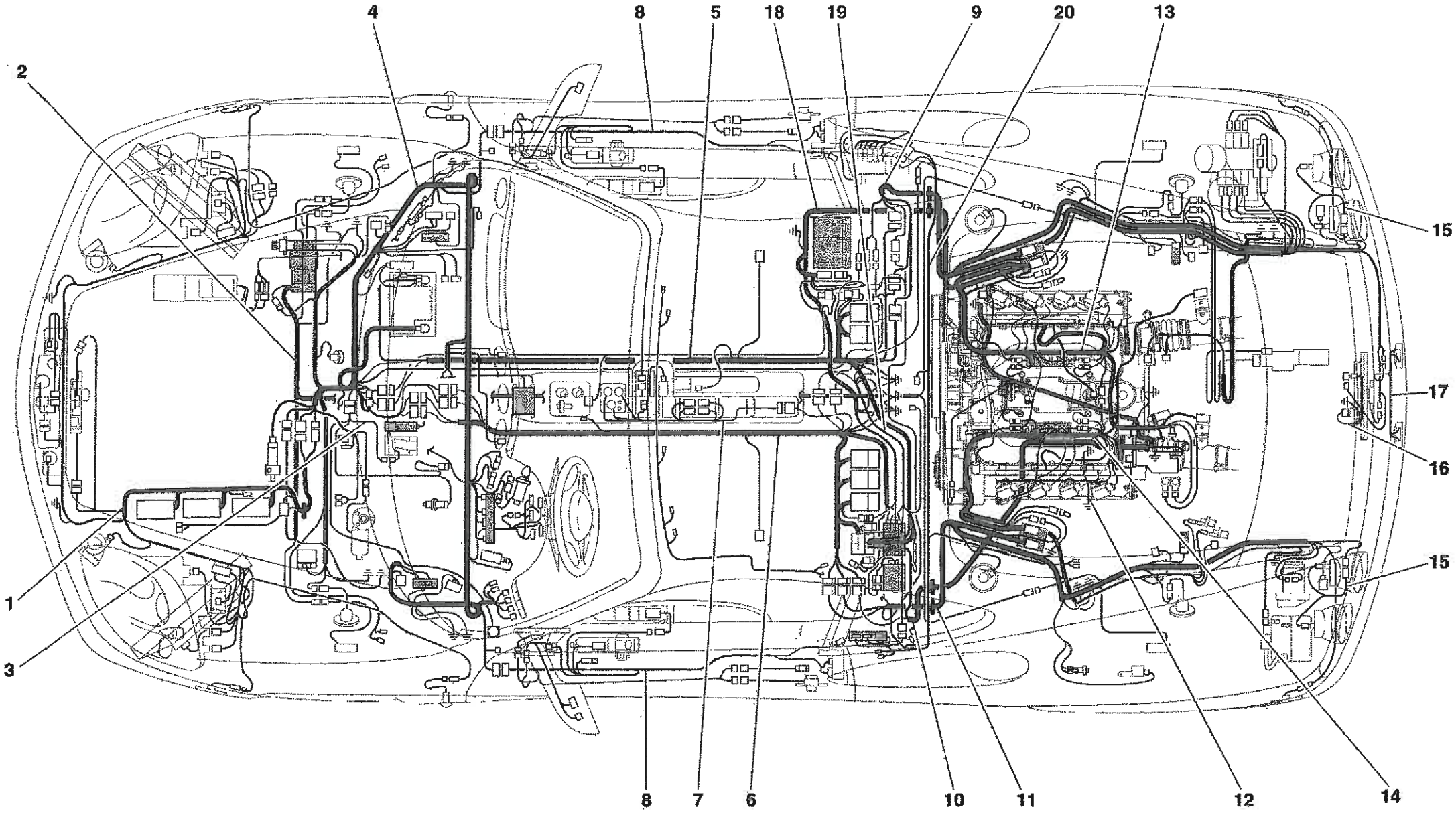
4
8
5
18
19
9
20
13
2
15
17
16
1
3
15
8
7
6
10
11
12
14

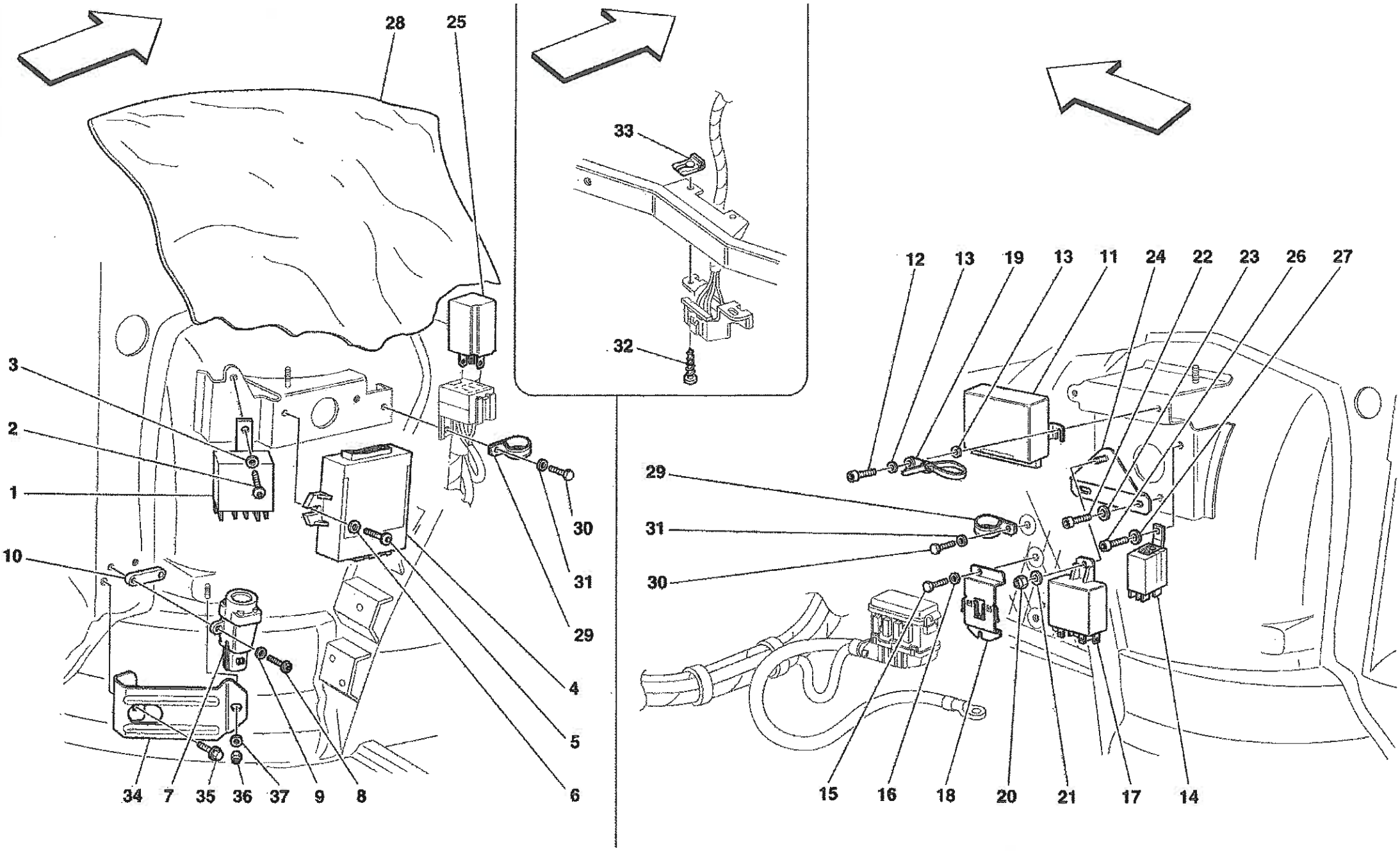
28
25
33
32
3
2
1
10
30
31
29
4
5
6
34
7
35
36
37
9
8
12
13
19
13
11
24
22
23
26
27
29
31
30
15
16
18
20
21
17
14

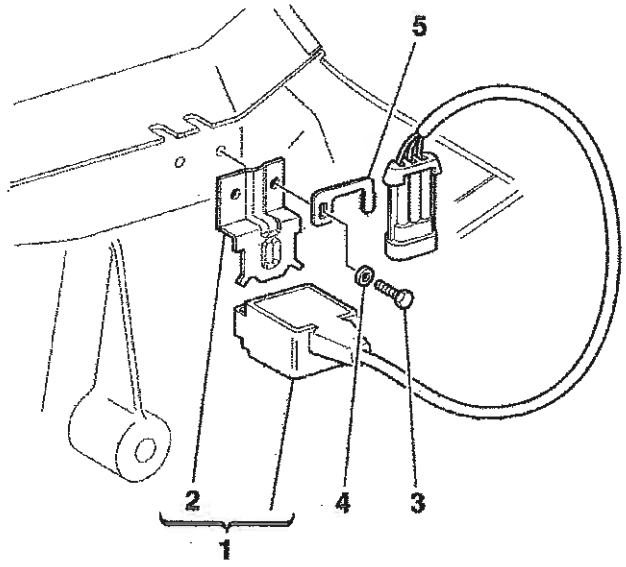
5
2
4
3
1

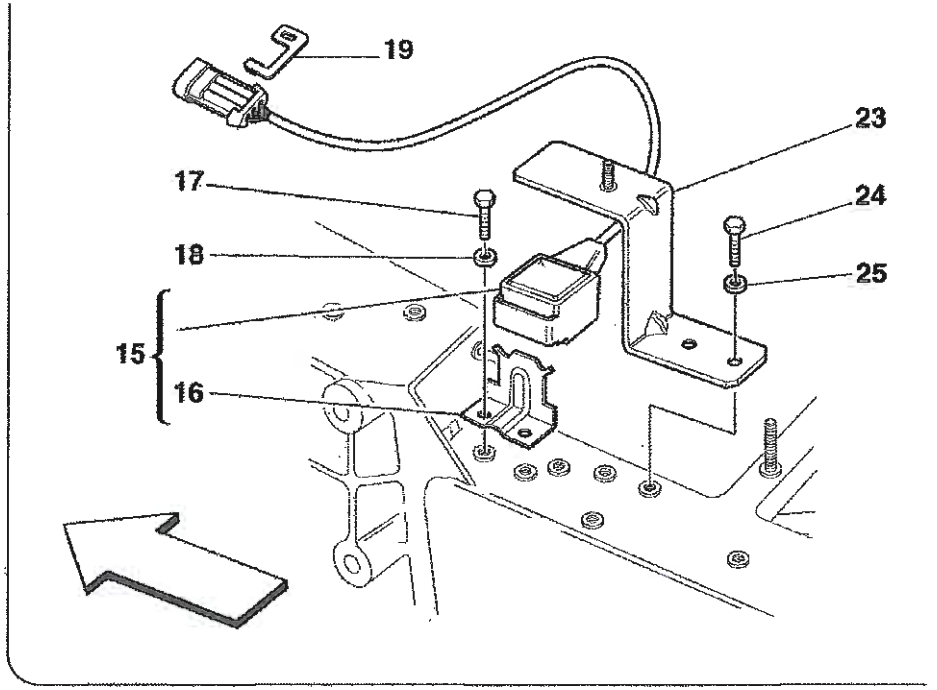
19
23
17
24
18
25
15
16

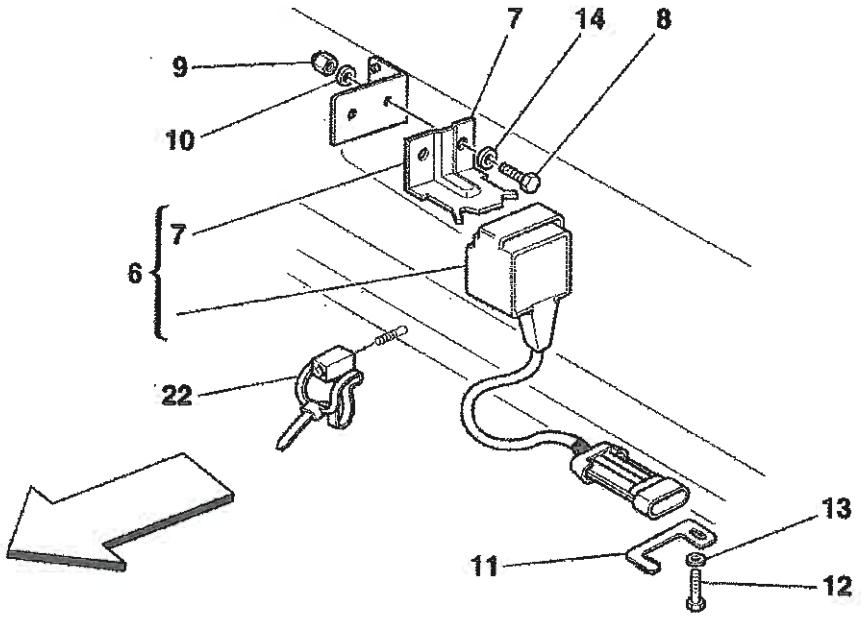
7
14
8
9
10
7
6
22
13
11
12

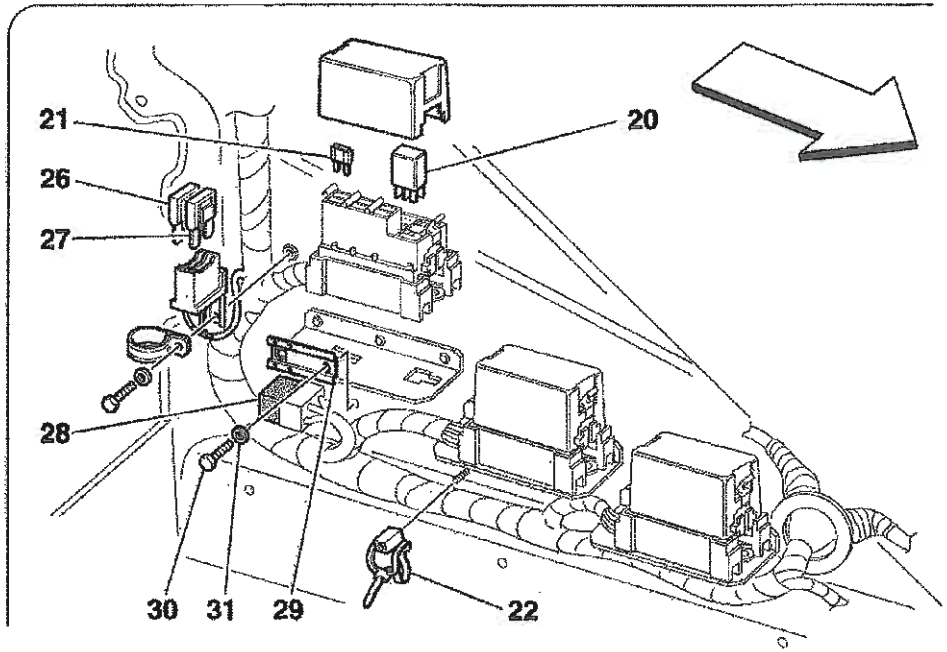
21
20
26
27
28
30
31
29
22

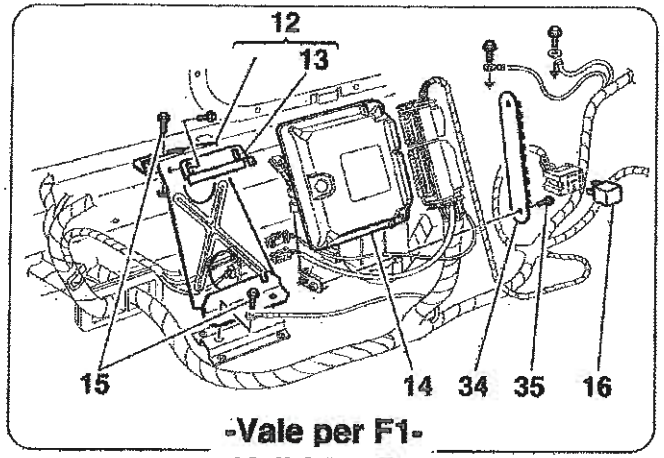

-Vale per F1-
-Valid for F1-

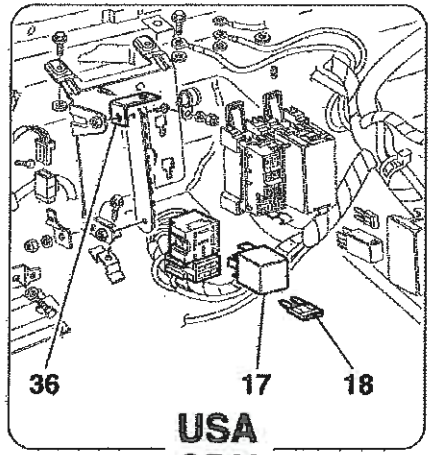

USA
CDN

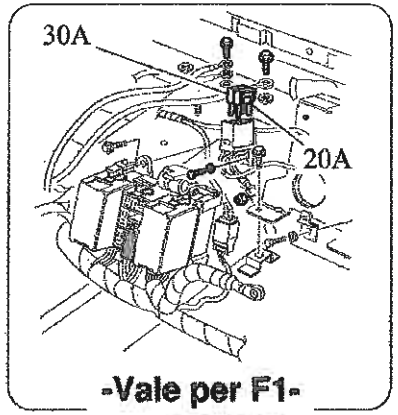

-Vale per F1-
-Valid for F1-

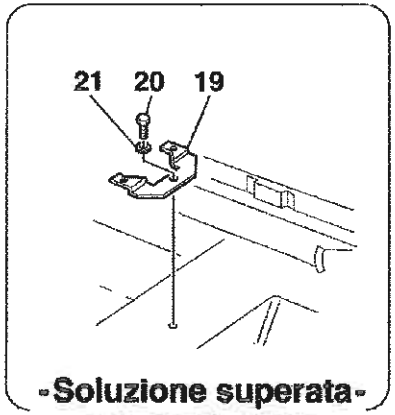

-Soluzione superata-
-Old solution-

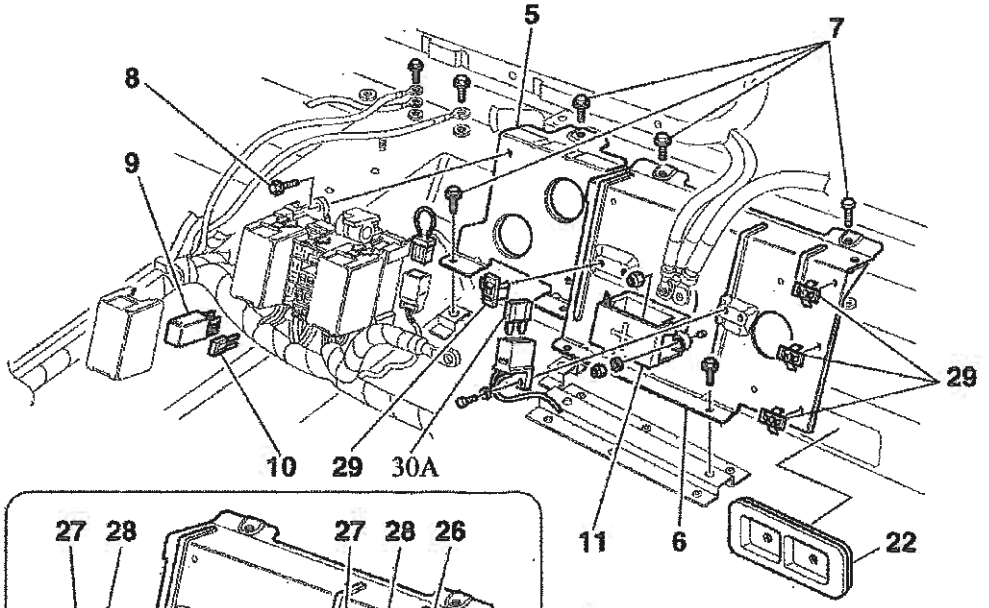

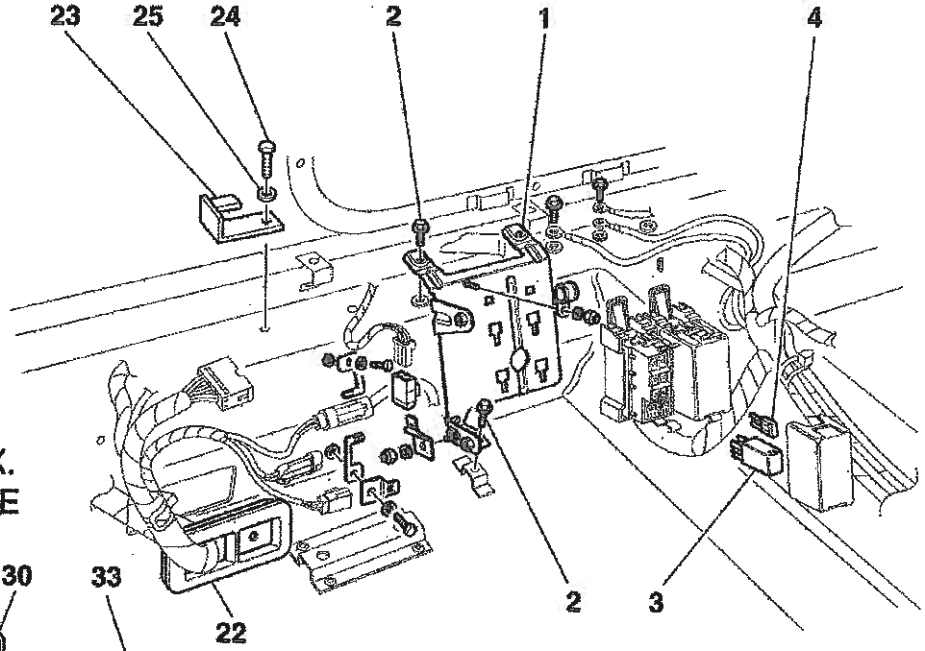

LATO DX.
R.H. SIDE

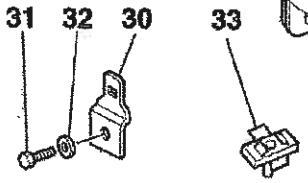

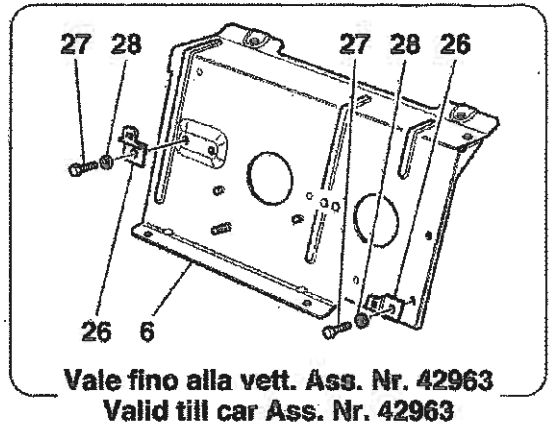

Vale fino alla vett. Ass. Nr. 42963
Valid till car Ass. Nr. 42963

LATO SX.
L.H. SIDE

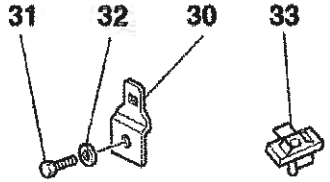

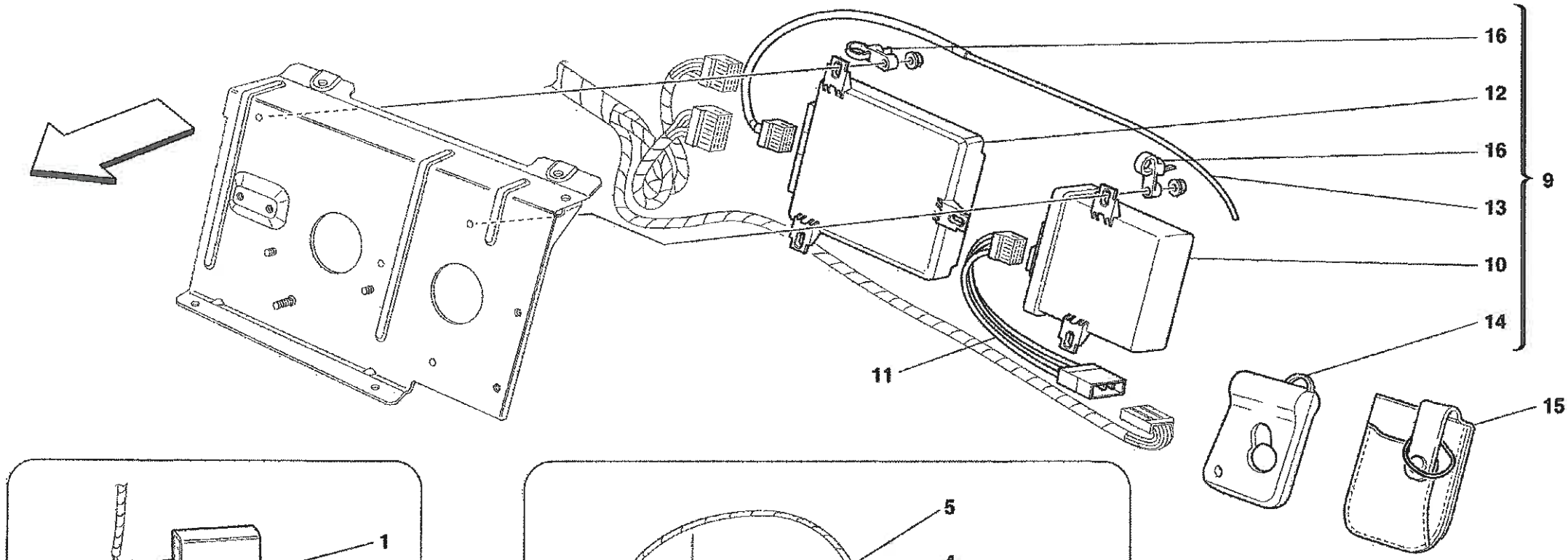
16
12
16
13
9
10
14
11
15

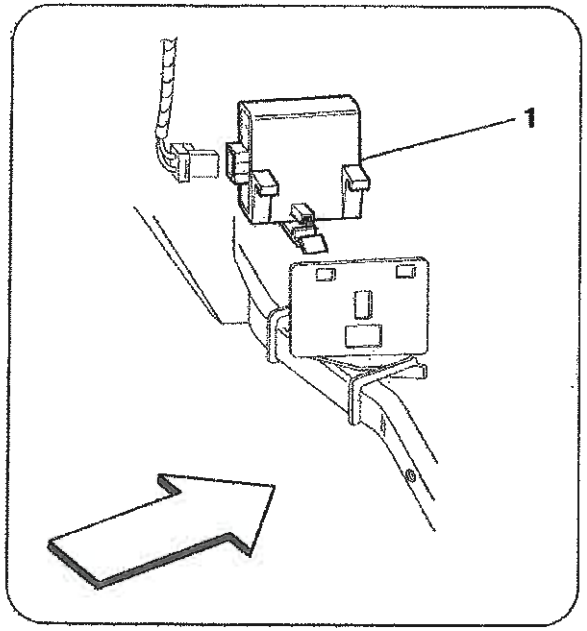
1

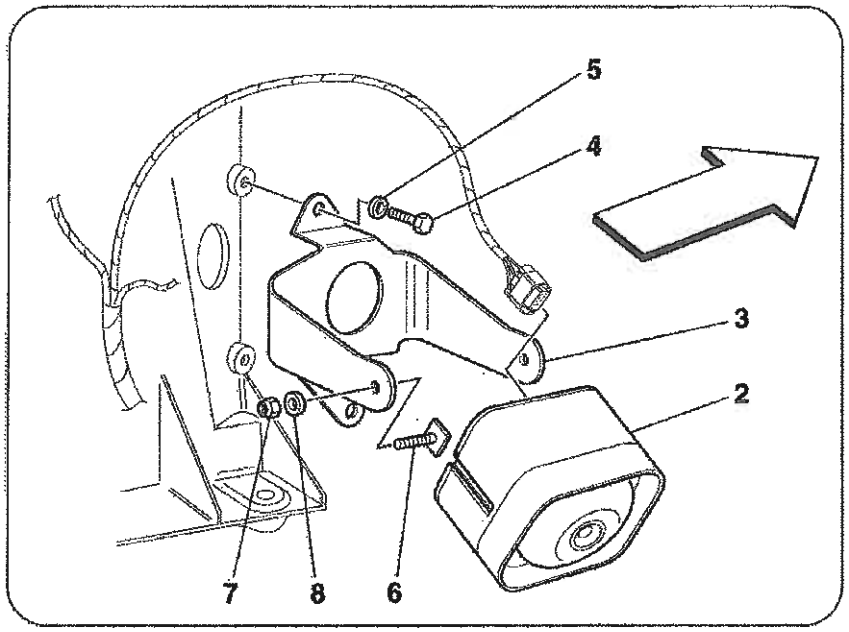
5
4
3
2
7
8
6

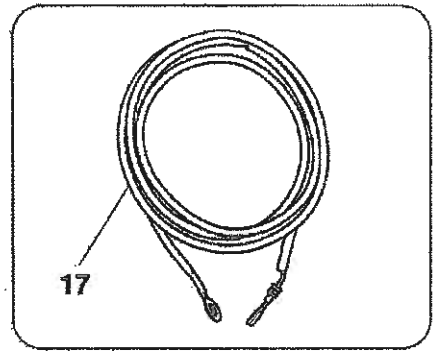
17

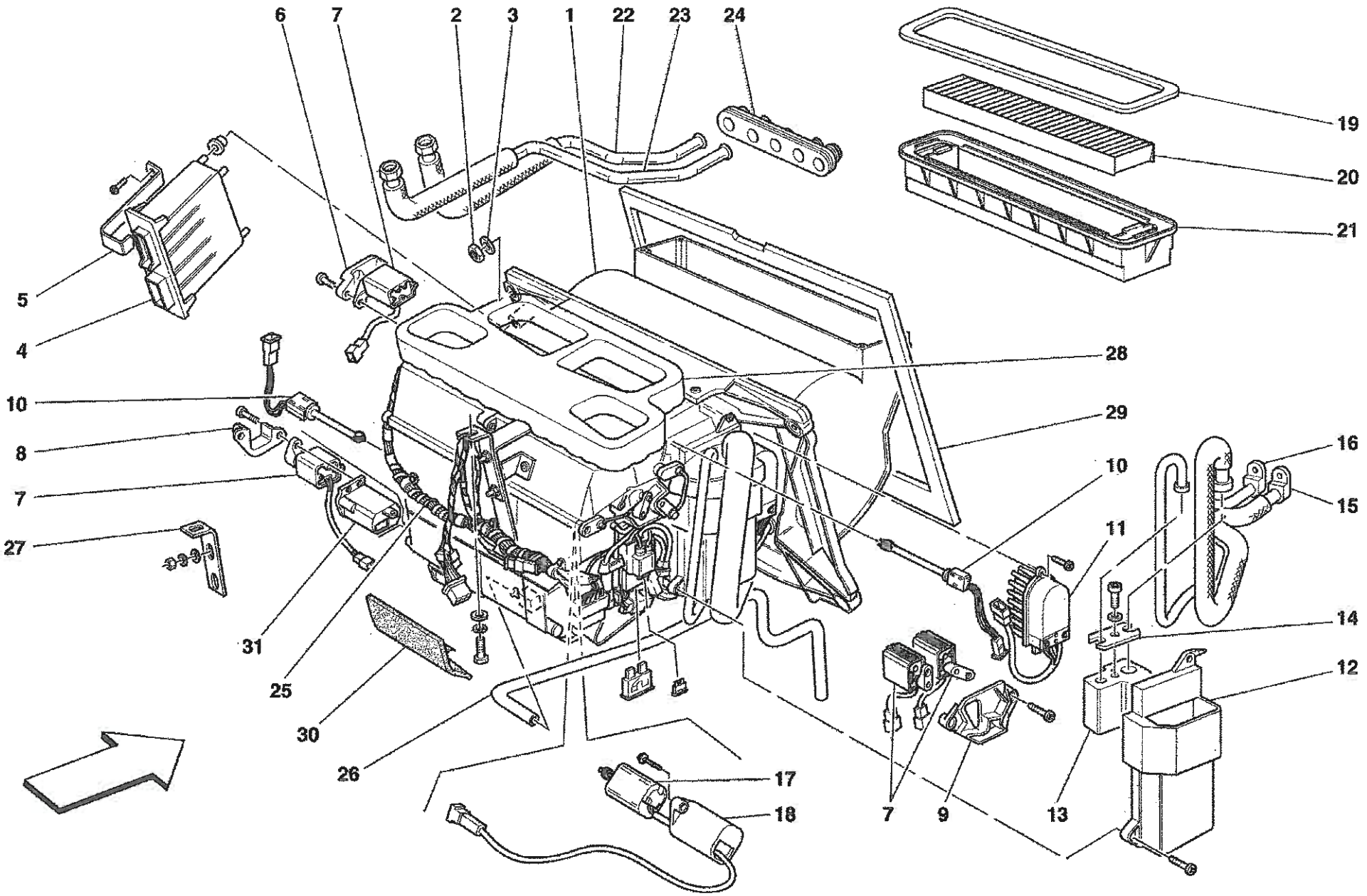
6
7
2
3
1
22
23
24
19
20
21
5
4
28
10
29
8
7
27
16
10
15
11
31
14
25
12
30
26
17
18
7
9
13

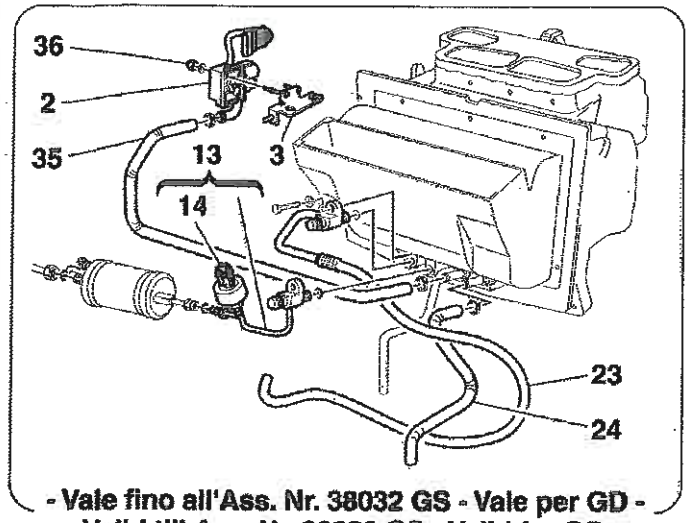

- Vale fino all'Ass. Nr. 38032 GS - Vale per GD -
- Valid till Ass. Nr. 38032 GS - Valid for GD -

Tav. 39
Tab. 39

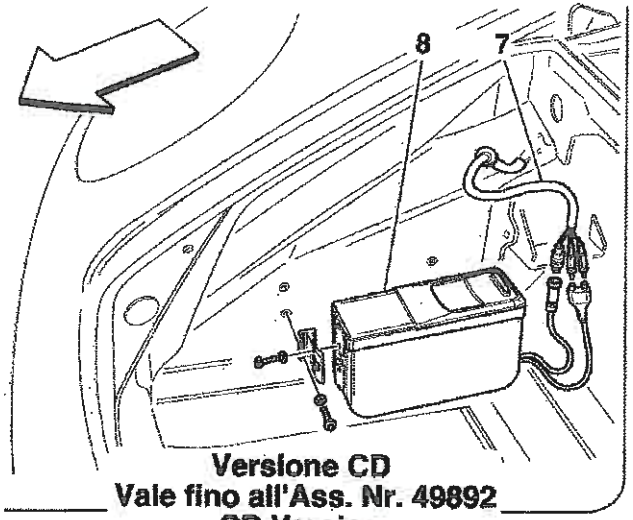

Versione CD
Vale fino all'Ass. Nr. 49892
CD Version
Valid till Ass. Nr. 49892

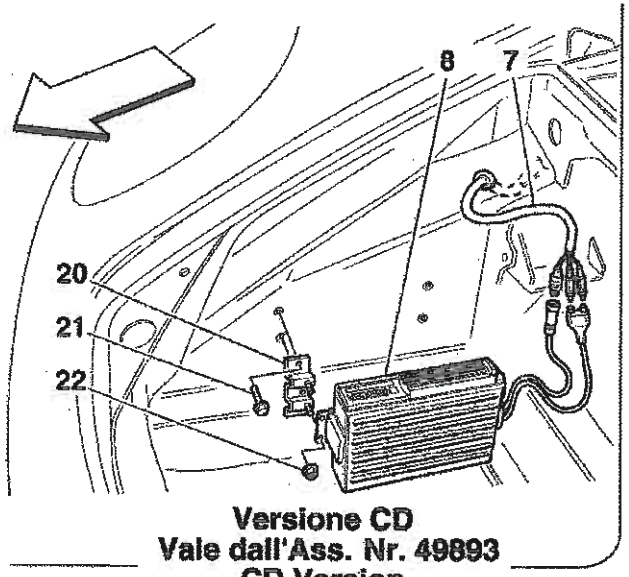

Versione CD
Vale dall'Ass. Nr. 49893
CD Version
Valid from Ass. Nr. 49893

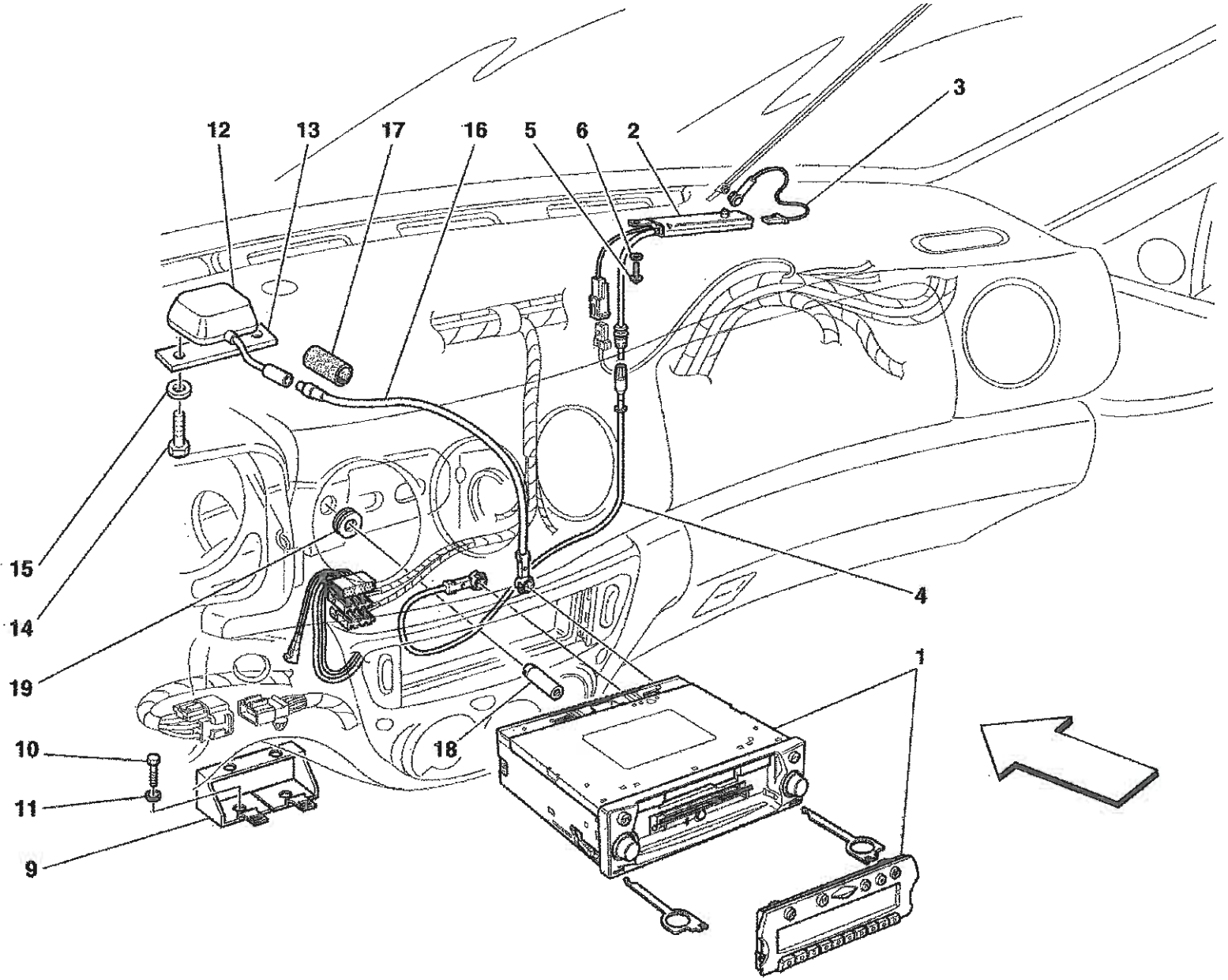

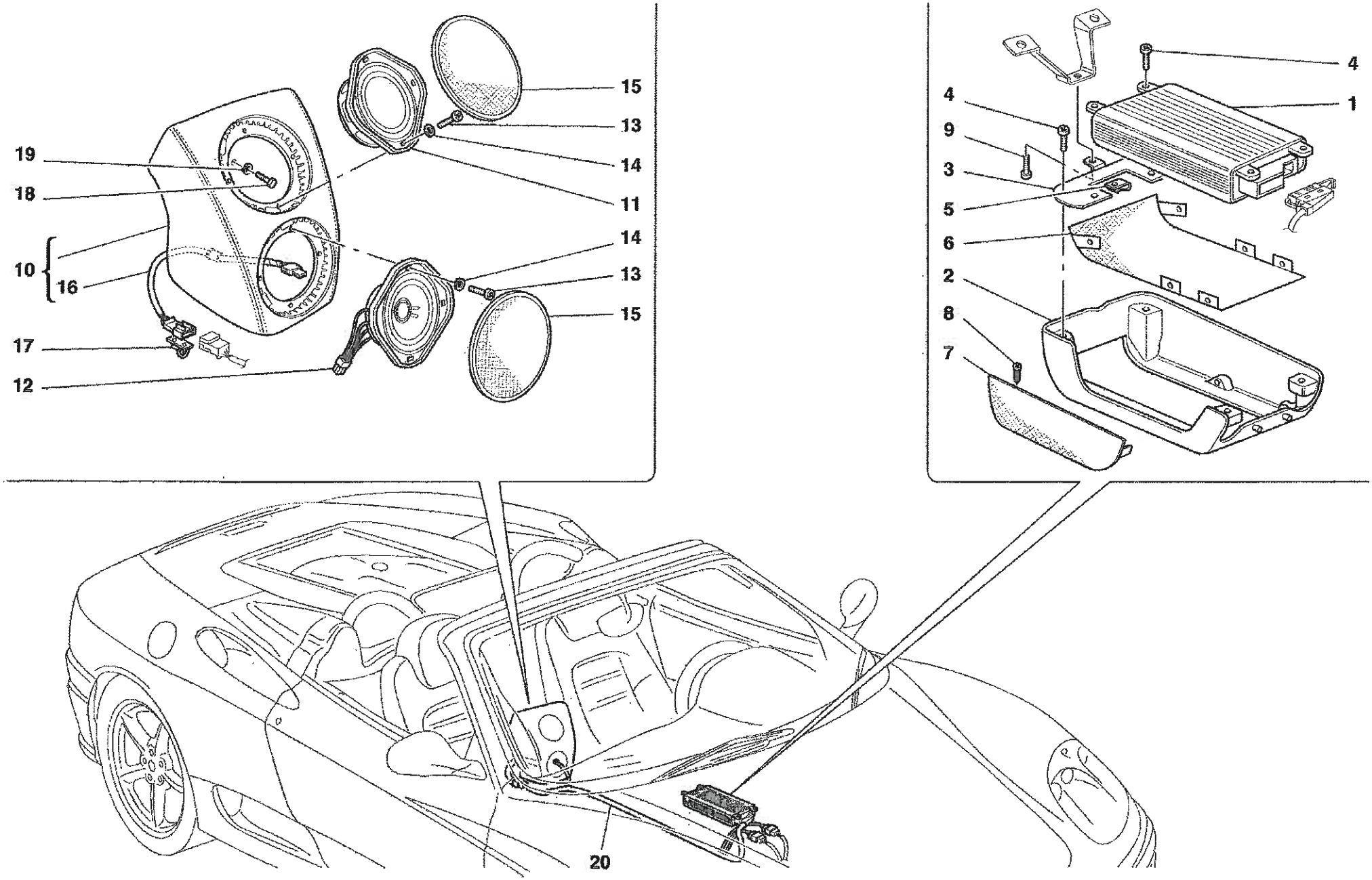
19
18
10
16
17
12
15
13
14
11
14
13
15
4
4
9
3
5
6
2
8
7
1
20